MOORE INDUSTRIES

June 2025
146-715-00 C

FCT [UB]

Signal Converter/Isolator

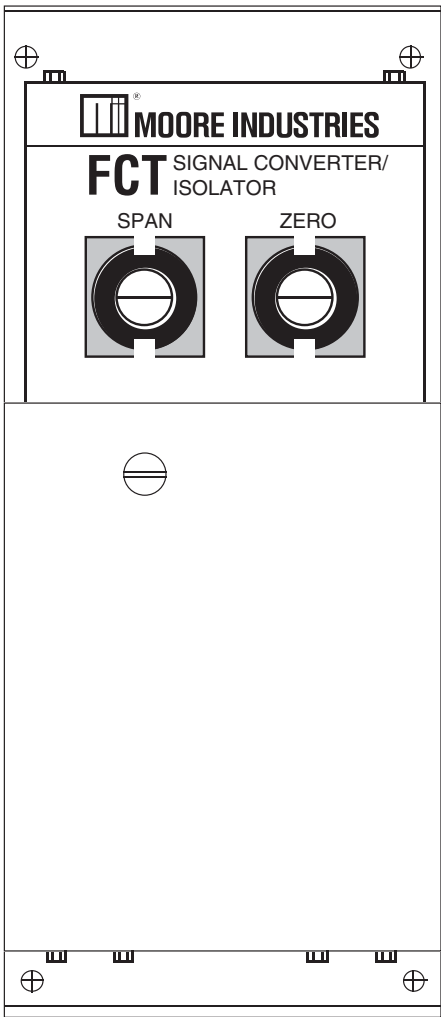

FCT [UB] Signal Converter/Isolator

FCT [UB]

Table of Contents

Introduction	**3**
Description	**3**
Specifications	**4**
Ordering Information	**4**
Calibration	**5-6**
Installation	**7-9**
Operation	**8**
Customer Support	**8**
Addendum A: FCT in [UB] Housing	**10**

FCT [UB]

Introduction

Moore Industries' FCT [UB] Signal Converter/ Isolator takes in either current or voltage input and provides isolated current or voltage output.

This manual contains the information necessary to calibrate, install, operate, maintain, and trouble-shoot the FCT [UB]. It includes a brief unit description, a table of performance and operational specifications, and an explanation of Moore Industries' model/serial number-based product data tracking system.

The following guidelines are used throughout the manual:

- A "*Note*" provides information to help you in avoiding minor inconveniences during calibration, installation, or operation.
- A "***Caution***" provides information on steps to take to avoid procedures and practices that could risk damage to the FCT [UB] or other equipment.
- A "***WARNING***" provides information on steps to take to avoid procedures and practices that could pose safety risks to personnel.

Description

The FCT [UB] is a compact, versatile device, featuring universal powering, and user-set zero and span potentiometers.

Universal Power Input signifies that the FCT [UB] can be powered either by alternating or direct current. The standard unit accepts from 90-260Vac and from 22-300Vdc power. No field configuration is required.

Complete Input/Output/Power isolation stops ground loops up to 1000Vrms.

UB Housing with U-back mounting bracket for surface mounting.

FCT [UB]

Specifications

Performance	**Accuracy:** ± 0.1% of span (includes adjustment resolution and linearity) **Isolation:** 1000Vrms between input, output and power **Dielectric Withstand Capability:** 1500Vrms between case, power, inputs and outputs **Frequency Response:** 5Hz at -3dB **Ripple:** 10mV peak-to-peak at maximum span and maximum load resistance. **Common Mode Rejection:** Exceeds 120dB at 60Hz with a limit of 1000Vrms
Performance (continued)	**Maximum Input Overrange:** Voltage inputs, ±60V; Current Inputs, ±50mA for 0-20mA inputs, ±100mA for 0-50mA inputs **Output Limiting:** 160% of full scale, maximum **RFI/EMI Effect:** 10V/m -ABC ≤ ±0.5% of full scale when tested according to SAMA Standard PMC 33.1 **Load Effect:** ±0.01% of span from zero to maximum load resistance **Power Supply Effect:** <0.05% of span over the full power supply range
Performance (continued)	**Transmitter Excitation (Optional):** Regulated, 24Vdc @ 25mA for one, 2-wire external transmitter
Ambient Condition Ratings	**Temperature Range:** -30°C to +82°C (-22°F to 180°F) **Effect on Accuracy:** ±0.015% of span/°C maximum change over -30°C to +70°C range (±0.008% of span/°F over -22°F to 158°F range) Ambient Temperature Reference Conditions for Specifications: 25°C
Adjustments	**Type:** External multiturn potentiometers **Span:** ±10% **Zero:** ±5%
Weight	300 grams (0.6 lbs)

Ordering Information

Unit	Input	Output	Power	Options	Housing
FCT [UB]	**0-20mA** into 50 ohms **4-20mA** into 50 ohms **0-50mA** into 20 ohms **10-50mA** into 20 ohms **0-1V** into 1 megohm **0-5V** into 1 megohm **1-5V** into 1 megohm **0-10V** into 2 megohms SPECIAL INPUTS Special input ranges to accommodate almost any application. Spans from 1 to 24V, or 1 to 100mA	**0-20mA** into 0-1200 ohms **4-20mA** into 0-1200 ohms **0-1V** into 20K ohms, minimum **0-5V** into 20K ohms, minimum **1-5V** into 20K ohms, minimum **0-10V** into 40K ohms, minimum SPECIAL OUTPUTS Special output ranges to accommodate almost any application. Spans from 10mV to 20V, or 1 to 50mA	**U** Universal power accepts 22-300Vdc or 90-260Vac, sensing and switching automatically (3.5W nominal, 5W maximum, depending on output)	**-TX** Transmitter Excitation	**UB** Standard housing with U-back bracket for surface mounting

Options

TX Option – This option provides a regulated 24Vdc supply at 25mA to power one external 2-wire transmitter.

FCT [UB] Model Numbers

To order additional or replacement modules for your system, refer to the Ordering Information table and "build" a model number using the information in bold text. Specify the following in order:

Product / Input / Output / Power / Option [Housing]

For a standard FCT [UB], specify:

FCT / 4-20MA / 4-20MA / U / [UB]

Look for the model and serial numbers on a silver label mounted above the terminal strips.

Specifications and information subject to change without notice.

Calibration

Prior to shipment, every FCT [UB] is subjected to rigorous testing by our team of skilled technicians. Every product Moore Industries manufactures, sells and services is guaranteed to meet the strict quality standards that have become synonymous with our name.

Before placing your FCT [UB] into service, a bench check of basic operation is recommended to ensure that the unit hasn't sustained any damage during transit.
Every unit should be:

- Checked to verify that the appropriate FCT [UB] model has been ordered for the intended application.
- Connected in a calibration setup (described later in this section) and checked for desired output.
- Adjusted for desired zero and span.

Even if a unit has been configured to your specifications by the factory (factory calibration), it is a good idea to perform this calibration as a simple bench check. The procedures provide a safe means to uncover any unit damage that may have occurred during shipping, and offer a simple familiarization with FCT [UB] operation in the safety of a testing environment, separate from the intended process or application.

These procedures should be carried out in an environment considered appropriate for general testing of electronic equipment, rather than in the field. Use a technician's bench or a similar, lab-type environment.

Setting Up for Zero/Span Calibration

The equipment listed in Table 1 is needed when calibrating the FCT [UB]. These items are not supplied by Moore Industries, but should be available in most testing labs.

Be sure to use calibrated test equipment when performing the bench check and zero/span adjustment of the FCT [UB]. The use of inaccurate test equipment will result in unreliable settings and precipitate costly process down-time.

Figure 1 shows the basic hookup used in the calibration procedures. Use a screwdriver to loosen terminal screws and connect appropriate leads to the labeled terminals. With connections completed as shown, apply the appropriate power to the setup and allow a few minutes for stabilization/warm-up.

Table 1. *Calibration Equipment*

Equipment	Specifications
Voltage or Current Source	Calibrated, adjustable source unit, capable of discrete output levels, ±0.025%, in the approrpriate range.
Power Source	AC or DC, from 22-300Vdc or 90-260Vac
Multimeter, Ammeter, or Voltmeter	Calibrated meter capable of verifying output, level, current or voltage. Accuracy 0.025%. A voltmeter may be used in combination with a load resistor for measuring current outputs.
Load Resistor	Required for verifying current outputs with voltmeter only. Tolerance of ±0.01%, minimum. Use 250 ohm resistor with current output ranges from 0-50mA.
Screwdriver	Blade tip width <2.54 mm (0.10 in.) maximum

FCT [UB]

Figure 1. *Calibrating the FCT [UB]*

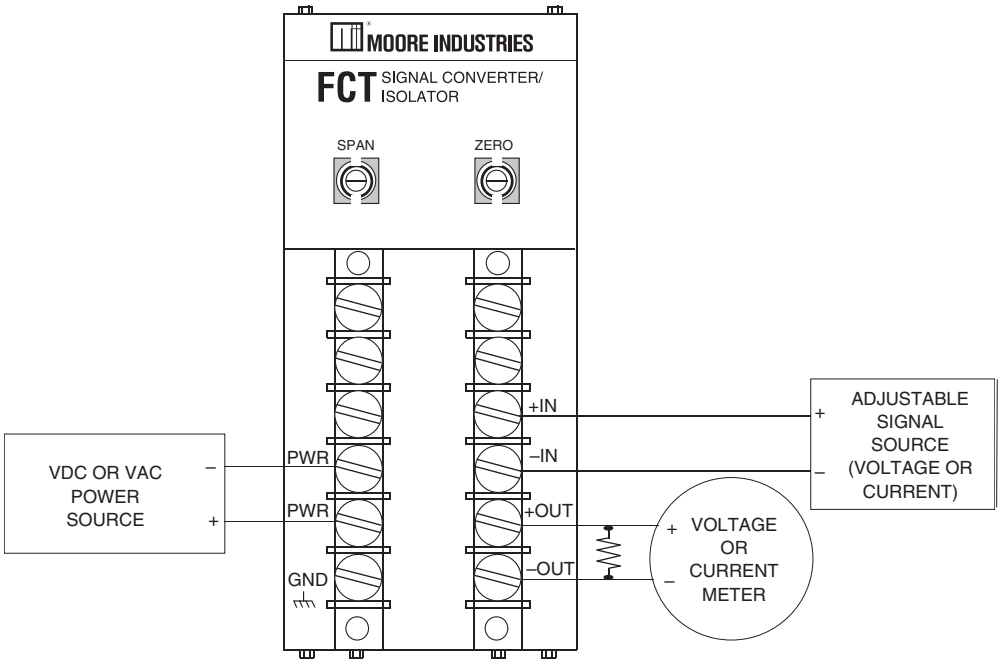

Calibrating Zero and Span

Before beginning this procedure, check the model number of the unit to be calibrated for the appropriate input/output type and range, and the required power input type.

The two pots on the front panel of the FCT [UB] are labeled “ZERO” and “SPAN”. They are both 15-turn potentiometers, equipped with slip clutch mechanisms to prevent damage in the event of overturning.

When calibrating the FCT [UB] zero and span, turn the appropriate pot clockwise to increase the setting, and counterclockwise to decrease the setting.

To Calibrate Zero and Span:

1. Turn both pots fully counterclockwise (minimum zero and span, 15 turns), then approximately 7 turns clockwise. This approximates mid-scale for the pots.

2. Set the input source in the setup to 0% (zero percent). 1V, for example, if the FCT [UB] being calibrated is rated for 1-5V input.

3. Note the meter reading, and turn zero pot clockwise to raise 0% output, or counterclockwise to lower 0% output, until the correct level is achieved.

4. Set the input source to 100% (full scale). 5V, for example, if the FCT [UB] being calibrated is rated for 1-5V input.

5. Note the meter reading, and turn span pot clockwise to raise 100% output, or counterclockwise to lower 100% output, until the correct level is achieved.

6. Repeat steps 2 through 5 until output is stable at both zero and 100 percent input.

Installation

Installation of the FCT [UB] is a two-step process. First, the unit is mounted, and then the electrical connections are made.

Before installing the FCT [UB], Moore Industries suggests that the calibration procedures be carried out to confirm that the configuration of the unit is appropriate for the intended application. Costly down-time will result if an inappropriately configured unit is installed.

Figure 2. *FCT [UB] Dimensions*

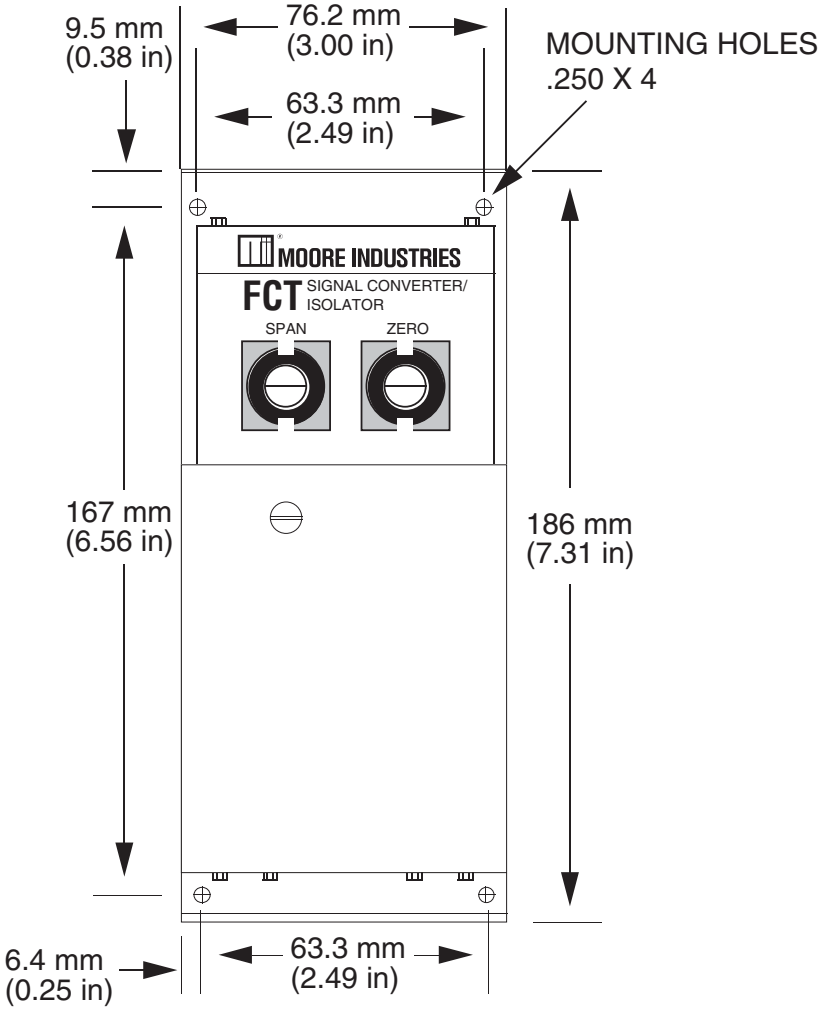

FCT [UB]

Electrical Connections

All electrical connections are made to terminals on the front of the unit. Each terminal is labeled. Refer to the Installation drawings for connections.

To make a connection, loosen the screw that corresponds to the terminal, install #6 ring or spade lug on all wires and tighten the screw until snug or 8 inch pounds maximum.

Recommended Ground Wiring Practices

The following ground wiring practices must be followed to ensure proper performance of the FCT [UB]:

- Any Moore Industries product in a metal case or housing should be grounded.
- All signals to and from Moore Industries' products should be wired using a shielded, twisted pair technique. Shields are to be connected to an earth or safety ground at the unit.
- The maximum length of any unshielded input and/or output signal wiring is 2 inches.

Operation

Once properly calibrated, connected, and powered, the FCT [UB] will operate reliably for an extended period of time. Unit maintenance is a simple check of terminal connections every six months.
If an FCT [UB] begins to malfunction or to function below rated specifications, complete the following checklist before calling the factory for assistance.

- Verify that all electrical connections are clean and tight.
- Verify that the power source for the unit is supplying power at levels rated safe and appropriate according to product specifications.
- Check the calibration of the instruments used in calibrating the FCT [UB].
- Verify that other devices in the process loop are not the cause of the problem.

  If the difficulties continue, remove the unit from service and recalibrate.

Customer Support

Moore Industries is recognized as the industry leader in delivering top quality to its customer, both in products and services. We perform a battery of stringent quality asurance checks on every unit we ship. If any Moore Industries product fails to perform up to rated specifications, call us for help. Our highly skilled staff of trained technicians and engineers pride themselves on their ability to provide timely, accurate, and practical answers to your process instrumentation questions. Factory phone numbers are on the back cover.

If problems involve a particular FCT [UB], there are several pieces of information you can gather ***before*** you call the factory that will help our staff to get your answers more efficiently. When you call, please have:

- The model number of the unit in question.
- The serial number of the unit in question.
- The job number (if available).
- The purchase order under which the unit was shipped (if available).

FCT [UB]

Figure 3. *Installing the FCT [UB]*

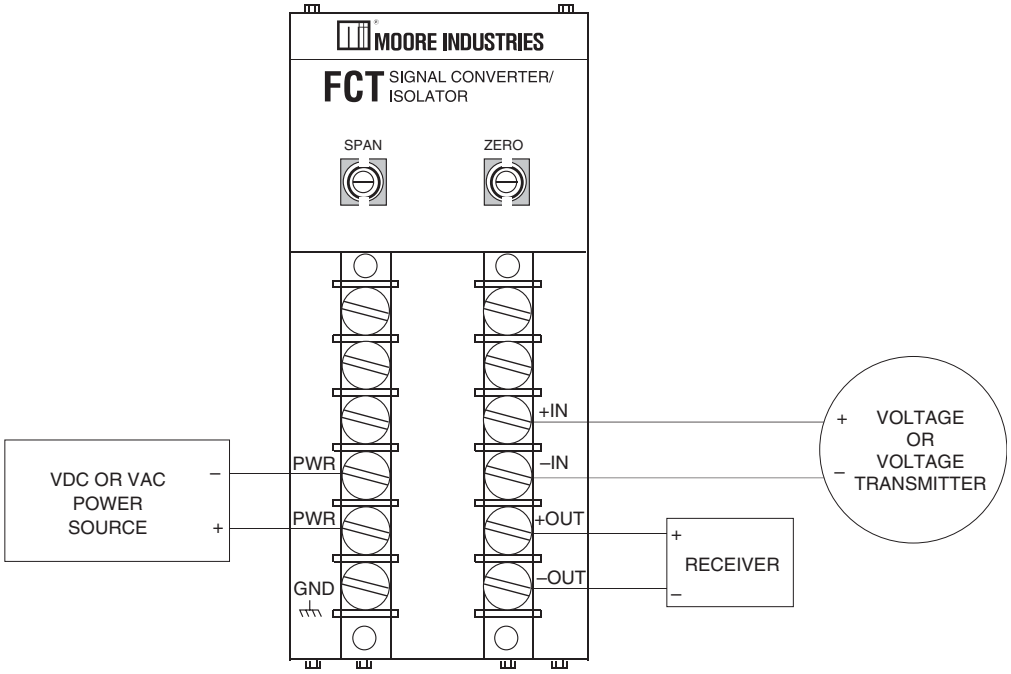

Figure 3. *Installing the FCT [UB] with the -TX option*

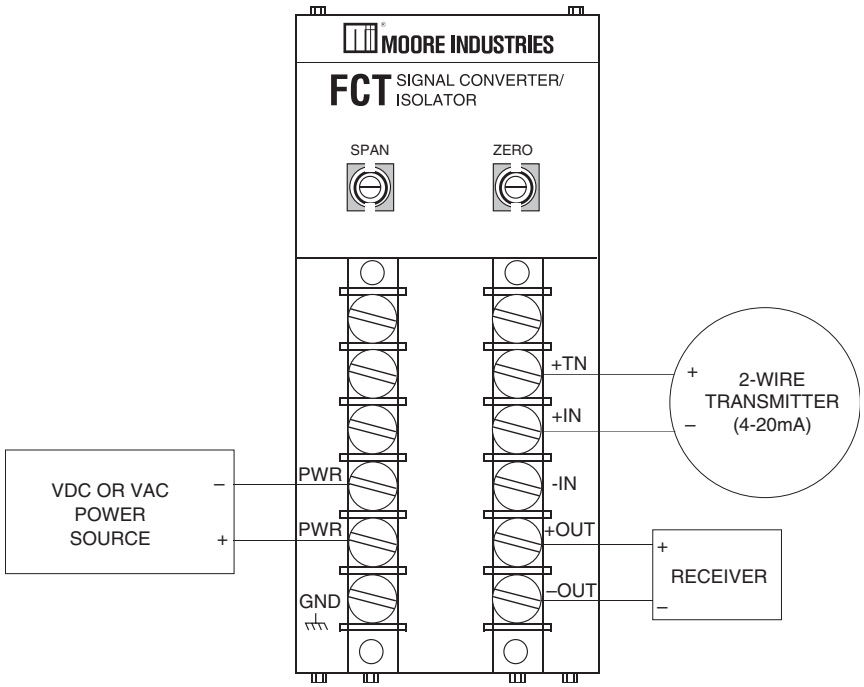

FCT [UB]

Addendum A: FCT in [UB] Housing

The FCT [UB] is electrically identical to the [DIN] version except for the housing and jumper locations Input/Output jumper selection.

For these inputs	With these outputs use these jumpers				
	0-1V(R201to46.4K)	0-5V	1-5V	0-10V	2-10V
0-1V*	J4,J205,J211,J208	J4,J205,J211,J208	J4,J203,J205,J208	J4,J205,J211,J208	J4,J203,J201,J208
0-5V	J1,J205,J211,J208	J1,J205,J211,J208	J1,J203,J205,J208	J1,J201,J211,J208	J1,J203,J201,J208
0-10V	J3,J205,J211,J208	J3,J205,J211,J208	J3,J203,J205,J208	J3,J201,J211,J208	J3,J203,J201,J208
0-1MA**	J4,J205,J211,J208	J4,J205,J211,J208	J4,J203,J205,J208	J4,J201,J211,J208	J4,J203,J201,J208
0-20MA	J4,J205,J211,J208	J4,J205,J211,J208	J4,J203,J205,J208	J4,J201,J211,J208	J4,J203,J201,J208
0-50MA	J2,J205,J211,J208	J2,J205,J211,J208	J2,J203,J205,J208	J2,J201,J211,J208	J2,J203,J201,J208
1-5V	J1,J204,J205,J210,J208	J1,J204,J205,J210,J208	J1,J205,J211,J208	J1,J204,J201,J210,J208	J1,J211,J201,J208
2-10V	J3,J204,J205,J210,J208	J3,J204,J205,J210,J208	J3,J205,J211,J208	J3,J204,J201,J210,J208	J3,J211,J201,J208
4-20MA	J4,J204,J205,J210,J208	J4,J204,J205,J210,J208	J4,J205,J211,J208	J4,J204,J201,J210,J208	J4,J211,J201,J208
10-50MA	J2,J204,J205,J211,J208	J2,J204,J205,J211,J208	J2,J205,J211,J208	J2,J204,J201,J210,J208	J2,J211,J201,J208

For these inputs	With these outputs use these jumpers				
	0-1MA(R217to1K)	0-20MA	4-20MA	0-50MA	10-50MA
0-1V*	J4,J211,J209	J4,J211,J209	J4,J203,J209	J4,J211,J207,J209	J4,J203,J207,J209
0-5V	J1,J211,J209	J1,J211,J209	J1,J203,J209	J1,J211,J207,J209	J1,J203,J207,J209
0-10V	J3,J211,J209	J3,J211,J209	J3,J203,J209	J3,J211,J207,J209	J3,J203,J207,J209
0-1MA**	J4,J211,J209	J4,J211,J209	J4,J203,J209	J4,J211,J207,J209	J4,J203,J207,J209
0-20MA	J4,J211,J209	J4,J211,J209	J4,J203,J209	J4,J211,J207,J209	J4,J203,J207,J209
0-50MA	J2,J211,J209	J2,J211,J209	J2,J203,J209	J2,J211,J207,J209	J2,J203,J207,J209
1-5V	J1,J210,J204,J209	J1,J210,J204,J209	J1,J211,J209	J1,J204,J210,J207,J209	J1,J211,J207,J209
2-10V	J3,J210,J204,J209	J3,J210,J204,J209	J3,J211,J209	J3,J204,J210,J207,J209	J3,J211,J207,J209
4-20MA	J4,J210,J204,J209	J4,J210,J204,J209	J4,J211,J209	J4,J204,J210,J207,J209	J4,J211,J207,J209
10-50MA	J2,J210,J204,J209	J2,J210,J204,J209	J2,J211,J209	J2,J204,J210,J207,J209	J2,J211,J207,J209

*Change R20 to Not Used
**Change R20 to 1K 800-1001F-55
J202 and J206 is not used
J6 is used for **normal** input/output relationship, *J5 is used in place of J6* for reversed input/output relationship
If J207 is used, then R216 (33.2Ω) must be installed.

FCT [UB]

Figure 4. *Jumper Location*

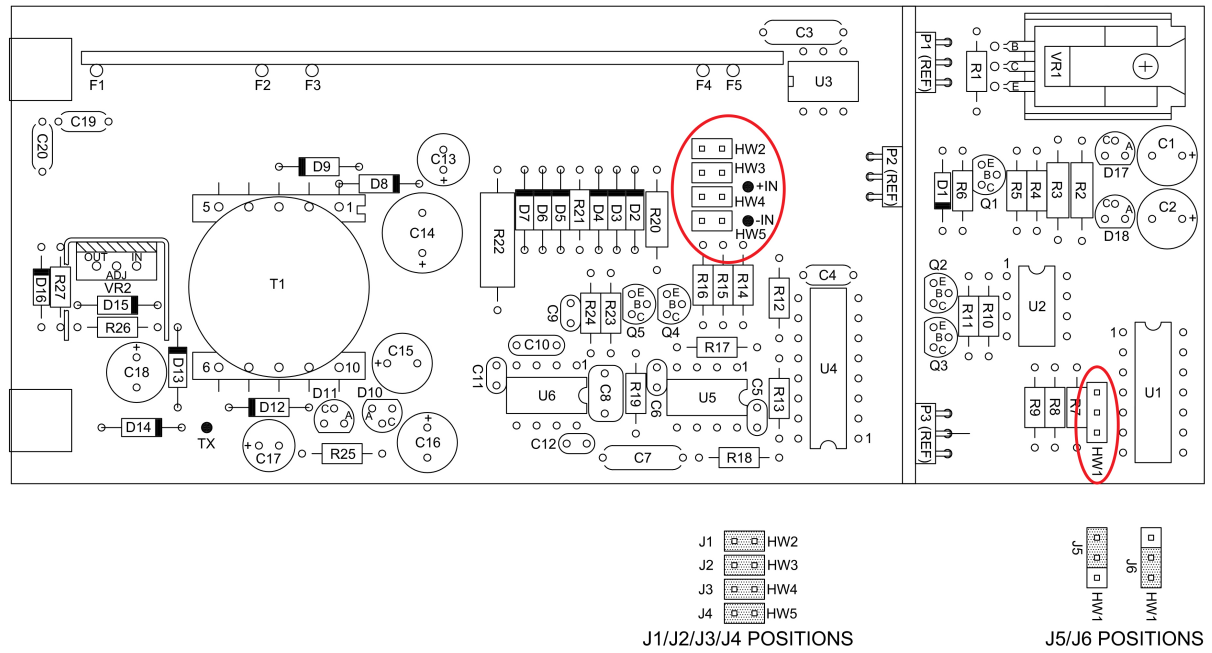

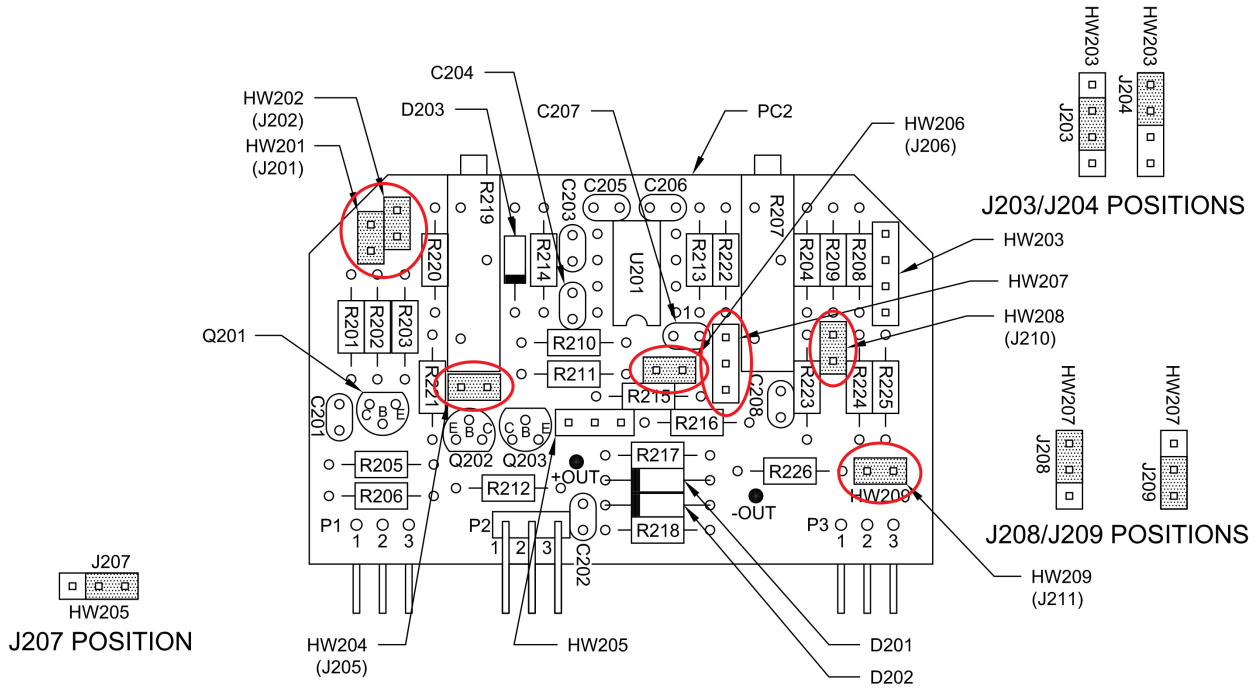

RETURN PROCEDURES

To return equipment to Moore Industries for repair, follow these four steps:

1. Call Moore Industries and request a Returned Material Authorization (RMA) number.

   Warranty Repair –
   If you are unsure if your unit is still under warranty, we can use the unit's serial number to verify the warranty status for you over the phone. Be sure to include the RMA number on all documentation.

   Non-Warranty Repair –
   If your unit is out of warranty, be prepared to give us a Purchase Order number when you call. In most cases, we will be able to quote you the repair costs at that time. The repair price you are quoted will be a "Not To Exceed" price, which means that the actual repair costs may be less than the quote. Be sure to include the RMA number on all documentation.

2. Provide us with the following documentation:
   a) A note listing the symptoms that indicate the unit needs repair
   b) Complete shipping information for return of the equipment after repair
   c) The name and phone number of the person to contact if questions arise at the factory

3. Use sufficient packing material and carefully pack the equipment in a sturdy shipping container.

4. Ship the equipment to the Moore Industries location nearest you.

The returned equipment will be inspected and tested at the factory. A Moore Industries representative will contact the person designated on your documentation if more information is needed. The repaired equipment, or its replacement, will be returned to you in accordance with the shipping instructions furnished in your documentation.

WARRANTY DISCLAIMER

THE COMPANY MAKES NO EXPRESS, IMPLIED OR STATUTORY WARRANTIES (INCLUDING ANY WARRANTY OF MERCHANTABILITY OR OF FITNESS FOR A PARTICULAR PURPOSE) WITH RESPECT TO ANY GOODS OR SERVICES SOLD BY THE COMPANY. THE COMPANY DISCLAIMS ALL WARRANTIES ARISING FROM ANY COURSE OF DEALING OR TRADE USAGE, AND ANY BUYER OF GOODS OR SERVICES FROM THE COMPANY ACKNOWLEDGES THAT THERE ARE NO WARRANTIES IMPLIED BY CUSTOM OR USAGE IN THE TRADE OF THE BUYER AND OF THE COMPANY, AND THAT ANY PRIOR DEALINGS OF THE BUYER WITH THE COMPANY DO NOT IMPLY THAT THE COMPANY WARRANTS THE GOODS OR SERVICES IN ANY WAY.

ANY BUYER OF GOODS OR SERVICES FROM THE COMPANY AGREES WITH THE COMPANY THAT THE SOLE AND EXCLUSIVE REMEDIES FOR BREACH OF ANY WARRANTY CONCERNING THE GOODS OR SERVICES SHALL BE FOR THE COMPANY, AT ITS OPTION, TO REPAIR OR REPLACE THE GOODS OR SERVICES OR REFUND THE PURCHASE PRICE. THE COMPANY SHALL IN NO EVENT BE LIABLE FOR ANY CONSEQUENTIAL OR INCIDENTAL DAMAGES EVEN IF THE COMPANY FAILS IN ANY ATTEMPT TO REMEDY DEFECTS IN THE GOODS OR SERVICES , BUT IN SUCH CASE THE BUYER SHALL BE ENTITLED TO NO MORE THAN A REFUND OF ALL MONIES PAID TO THE COMPANY BY THE BUYER FOR PURCHASE OF THE GOODS OR SERVICES.

ANY CAUSE OF ACTION FOR BREACH OF ANY WARRANTY BY THE COMPANY SHALL BE BARRED UNLESS THE COMPANY RECEIVES FROM THE BUYER A WRITTEN NOTICE OF THE ALLEGED DEFECT OR BREACH WITHIN TEN DAYS FROM THE EARLIEST DATE ON WHICH THE BUYER COULD REASONABLY HAVE DISCOVERED THE ALLEGED DEFECT OR BREACH, AND NO ACTION FOR THE BREACH OF ANY WARRANTY SHALL BE COMMENCED BY THE BUYER ANY LATER THAN TWELVE MONTHS FROM THE EARLIEST DATE ON WHICH THE BUYER COULD REASONABLY HAVE DISCOVERED THE ALLEGED DEFECT OR BREACH.

RETURN POLICY

For a period of thirty-six (36) months from the date of shipment, and under normal conditions of use and service, Moore Industries ("The Company") will at its option replace, repair or refund the purchase price for any of its manufactured products found, upon return to the Company (transportation charges prepaid and otherwise in accordance with the return procedures established by The Company), to be defective in material or workmanship. This policy extends to the original Buyer only and not to Buyer's customers or the users of Buyer's products, unless Buyer is an engineering contractor in which case the policy shall extend to Buyer's immediate customer only. This policy shall not apply if the product has been subject to alteration, misuse, accident, neglect or improper application, installation, or operation. THE COMPANY SHALL IN NO EVENT BE LIABLE FOR ANY INCIDENTAL OR CONSEQUENTIAL DAMAGES.

MOORE INDUSTRIES

WORLDWIDE • www.miinet.com

United States • info@miinet.com
Tel: (818) 894-7111 • FAX: (818) 891-2816

Belgium • info@mooreind.be
Tel: 03/448.10.18 • FAX: 03/440.17.97

China • sales@mooreind.sh.cn
Tel: 86-21-62491499 • FAX: 86-21-62490635

Australia • sales@mooreind.com.au
Tel: (02) 8536-7200 • FAX: (02) 9525-7296

The Netherlands • sales@mooreind.nl
Tel: (0)344-617971 • FAX: (0)344-615920

United Kingdom • sales@mooreind.com
Tel: 01293 514488 • FAX: 01293 387752

© 2025 Moore Industries-International, Inc.

Specifications and Information subject to change without notice.