MOORE INDUSTRIES WORLDWIDE

SFY

Functional Safety Frequency-to-DC Transmitter with Display

July 2025

Description

The SFY Functional Safety SIL 3 capable Frequency-to-DC Transmitter with Display is part of Moore Industries' **FS Functional Safety Series**. It monitors frequency, period, high or low pulse width, and contact closure signals and converts the input signal to a proportional, input-to-output isolated 4-20mA output ready for direct interface with a Safety System, readout instrument, recorder, PLC, DCS, SCADA system.

The 2-wire (loop-powered) SFY is ideal for use in your Safety Instrumented System (SIS) in a wide range of process and factory automation monitoring applications:

- **Turbine Tachometer Generators**
- **Turbine Flow Meters**
- **Magnetic Pickups** • **Dry Contact Closures**
- **Variable Frequency Drives** • **Rotating Equipment**
- **Pulse and Frequency Output Transducers**
- **Motor and Conveyor Speed**

Figure 1. *The SFY configures with application-specific operating parameters in just minutes using our single-window Intelligent PC Configuration Software*

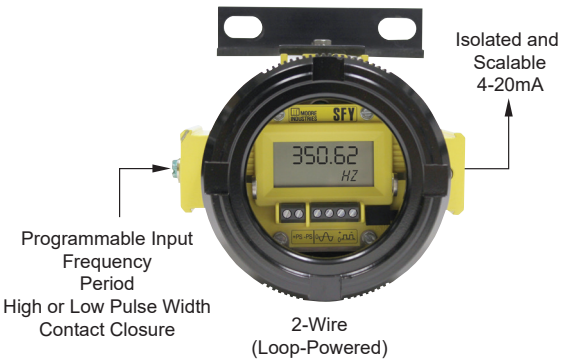

Certifications

exida Certified

The SFY installs quickly and easily *in harsh conditions using our protective field-mount enclosures, or on a surface, DIN-rail or relay track.*

Features

- **exida certified to IEC 61508:2010.** Certified by exida to IEC 61508 for systematic integrity up to SIL 3 and for random integrity up to SIL 2. This means that an SFY is approved for single use in Safety Instrumented Systems (SIS) up to SIL 2 and in a redundant architecture (1oo2, 2oo3, etc.) up to SIL 3.
- **Comprehensive FMEDA certified safety data.** Upon request, exida-certified FMEDA data is available for a functional safety practitioner to use in determining the SFY's applicability in specific safety-related applications.
- **Exceptional accuracy and long-term stability.** Typical accuracy is ±0.025% of span with up to 5 years between scheduled calibrations.
- **Sets up in minutes with PC software.** You can choose, and then view to confirm, all application-specific operating parameters.
- **Versatile input choices.** Measures frequency ranges between an amazingly low 0.005Hz up to 25kHz; periods from 40microseconds to 200sec; and pulse widths from 0.2msec to 200 seconds.
- **Programmable moving average filter.** Minimizes measurement instability caused by the effects of bent turbine blades and other frequency variations.
- **User-configurable display.** A 5-digit LCD shows the process variable in selectable engineering units.
- **Input-to-output isolated and RFI/EMI protected.** Resistant to unpredictable ground loops and the harmful effects of plant and equipment "noise".

©2025 Moore Industries-International, Inc.

SFY

Functional Safety Frequency-to-DC Transmitter with Display

Frequency Monitoring in Safety Systems

The SFY can be used in Safety Instrument Functions (SIF) where frequency or pulse signals need to be monitored. Examples of these include turbine over speed protection, critical exhaust fans for personnel safety, compressor monitoring and protection.

FMEDA reports are available with the required safety data to ensure that the SFY meets the requirements of each SIF.

Turbine Over Speed Protection

In the example below the SFY is used as part of an SIF to shut down a turbine if it exceeds a defined speed.

Figure 2. *Turbine Over Speed Protection System*

Figure 3. *Compressor Monitoring and Protection*

Compressor Monitoring and Protection

Critical compressors often need an independent safety protection system. The SFY can be used as part of the SIF to monitor the speed and provide data to a safety logic solver.

To accomplish this, a magnetic pickup is attached to the compressor shaft (Figure 3). The pickup provides a frequency output. The SFY takes the pickup signal, converts it to a 4-20mA output proportional to the compressor shaft speed, and transmits it to the SIS Logic Solver. Should there be an unwanted change in speed, it can be detected at the Logic Solver.

Certifications: **SFY-HP**
(Approved for **PRG** Input Only; Not **10-250V** Input)

Factory Mutual Approvals (FM Global Group):
Non-Incendive
Class I, Division 2, Groups A, B, C & D

CE Conformant:
EMC Directive 2014/30/EU - EN 61326

Certifications: **SFY-HP in BH/SB2 Housing**
(Approved for **PRG** Input Only; Not **10-250V** Input)

Factory Mutual Approvals (FM Global Group):
Explosion-Proof & Dust/Ignition-Proof
Class I, Division 1, Groups A*, B, C & D
Class II & III, Division 1, Groups E, F & G
Environmental Protection: NEMA 4X & IP66
T6 @ 60°C Maximum Operating Ambient
**For Group A applications, seal all conduits within 18"*

Canadian Standards Association (CSA Group):
Explosion-Proof
Class I, Division 1, Groups A*, B, C & D
Class II, III, Groups E, F & G
Type 4X, IP66
Ambient Temperature Range: -20°C to +60°C; T6
**For U.S. Group A applications, seal all conduits within 18"*

ANZEx **ANZEx (TestSafe):**
Explosion-Proof/Flameproof
Ex d IIC T6 (Tamb 60°C)

Specifications

Performance

Input Accuracy: See Tables 1-7
Output Accuracy: ±0.015% of span
Overall Accuracy: The overall accuracy of the unit is the combined input and output accuracies. It includes the combined effects of linearity, hysteresis, repeatability, and adjustment resolution. Does not include ambient temperature effect.
Input Hysteresis: See Tables 5-7
Input Threshold: See Tables 5-7
Stability: See Table 1
Minimum Frequency: Twice the lower range
Digital Input Filter: 3dB point is at 10kHz
Step Response Time: 300msec maximum, 200msec typical from the time an input is applied to the output reaching 90% of its final value + actual input
Rise Time: 100msec maximum for the output to change from 10% to 90% of its scale of an input step change of 0% to 100% + actual input
Isolation: 500Vrms between input, output, and case continuous, and will withstand a 500Vac dielectric strength test for one minute with no breakdown
Ripple: 10mV p-p measured across a 250 ohm resistor
Overcurrent Limiting: 25mA maximum
Maximum Voltages: 48Vdc output, maximum; DC input, 48Vdc,

Performance (Continued)

maximum; AC input, 30Vac maximum for 0.02-30AC model, 250Vac maximum for 10-250AC model
Input Impedance: >30kohms for DC and contact closure inputs; 2kohms for input >6V, 4kohms typical@50Hz and 56kohms typical@1kHz for input <6V for 0.02-30AC model; >125kohms for 10-250AC model
Load Capability: 508 ohms@24V

$$\frac{\text{Supply Voltage} - 12\text{V}}{0.0236\text{A}} = \text{Ohms}$$

Output Current Limiting: 3.8mA and 21.4mA for input under range and over range; 3.6mA and 23.6mA for input failure
Load Effect (current outputs): Negligible within specified power limits
Power Supply Effect: ±0.002% of span per 1V change
Startup Time: Performance within specification less than 1sec after power is applied for frequency higher than 100Hz and average of 8 samples
Damping: Adjustable from 0 to 30 seconds with PC software
Linearization: Configurable up to 128 points with PC software
Moving Average: Configurable up to 16 segments with PC software
Low Pass Filter: On/Off is software configurable

Display

Type: LCD; Top Row, 10.16mm (0.4 in) high black digits on a reflective

Display (Continued)

background; Bottom Row, 5.72mm (0.225 in) high black digits on a reflective background
Display Update Rate: 100msec
Format: Top row is five alphanumeric characters, plus sign and decimal point; bottom is five alphanumeric characters
Range: -99999 to 99999
Minimum Display Span: 1.00

Ambient Conditions

Operating & Storage Range: -40°C to +85°C (-40°F to +185°F)
Relative Humidity: 0-95%, non-condensing
Ambient Temperature Effect: Input to output, ±0.007% of span/°C maximum; Digital Accuracy, ±0.003% of span/°C maximum;
Ambient Temperature Reference Conditions for Specifications: 25°C
RFI/EMI Immunity: 20V/m@ 80-1000MHz, 1kHz AM, when tested according to IEC61000-4-3
Noise Rejection: Common mode, 120dB typical@100mVp-p input

Weight

SFY HP: 227 grams (5.3 ounces)
SFY in BH housing with glass cover: 1451 grams (3 pounds, 12.4 ounces)

Accessories

Configuration software can be downloaded from our website
.

To order additional cables:

Part Number	Part
804-030-26	Fuse Protected, Non-Isolated USB Communication Cable
803-039-26	Isolated Configuration Cable (9-pin Serial Port)
803-040-26	Non-Isolated Configuration Cable (9-pin Serial Port)

SFY

Functional Safety Frequency-to-DC Transmitter with Display

Table 1. *Stability for All Models**

		Input-to-Display (% of Reading)			Display-to-Output (% of Output Span**)		
		1 year	3 years	5 years	1 year	3 years	5 years
Frequency/Period		0.001	0.0017	0.0022	0.08	0.139	0.179
Pulse Width	**1 Sec**	0.001	0.0017	0.0022			
	0.1 Sec	0.0015	0.0026	0.0034			

*Combine Input-to-Display and Display-to-Output values to determine overall stability.
**Consult factory for improved long-term drift specifications.

NOTE:
AC indicates zero-crossing signal.
DC indicates non-zero crossing signal.

Table 2. *DC Input Accuracy and Minimum Amplitude*

Input Type	Input	Accuracy	Minimum Amplitude
Frequency	< 5kHz	0.01% ± 1 LSD	100 mV
	5kHz - 20kHz	0.05% ± 1 LSD	200 mV
	> 20kHz	0.10% ± 1 LSD	200 mV
Period	< 50µs	0.10% ± 1 LSD	200 mV
	50µs - 200µs	0.05% ± 1 LSD	200 mV
	> 200µs	0.01% ± 1 LSD	100 mV
Pulse Width	entire range	0.05% ± 1 LSD ± 2 µs	1 V
Contact Closure	entire range	0.01% ± 1 LSD	

Table 3. *AC Input Accuracy and Minimum Amplitude*

Input Type	Input	Accuracy	Minimum Amplitude
Frequency	< 10Hz	0.01% ± 1 LSD	20 mV
	10Hz - 5kHz	0.01% ± 1 LSD	200 mV
	5kHz - 20kHz	0.05% ± 1 LSD	200 mV
	> 20kHz	0.10% ± 1 LSD	1 V
Period	< 50µs	0.10% ± 1 LSD	1 V
	50µs - 200µs	0.05% ± 1 LSD	200 mV
	200µs - 100ms	0.01% ± 1 LSD	200 mV
	> 100ms	0.01% ± 1 LSD	20 mV

Table 4. *AC Input Accuracy and Minimum Amplitude For 10-250V Input Type*

Input Type	Input	Accuracy	Minimum Amplitude
Frequency	< 5kHz	0.01% ± 1 LSD	10V
	5kHz - 20kHz	0.05% ± 1 LSD	10V
	> 20kHz	0.10% ± 1 LSD	10V
Period	< 50µs	0.10% ± 1 LSD	10V
	50µs - 200µs	0.05% ± 1 LSD	10V
	> 200µs	0.01% ± 1 LSD	10V

Table 5. *Maximum Configurable Input Range And Minimum Span*

Input Type	Max Configurable Range	Min Span
Frequency	0 - 25kHz	See Table 9
Period	0 - 70s	500µsec
Pulse Width	0 - 70s	500µsec
Contact Closure	0 - 20Hz	0.1Hz

Table 6. *Frequency Input Parameters*

Input Range	Threshold Resolution	Threshold Range	Hysteresis Resolution	Hysteresis Range	Filter (3db Point)	Measured Frequency
100mV-30V (DC)	1mV	0.01-2.5V	1mV	0.01-1.5V	10kHz	0.02Hz to 25kHz
20mV-30V (AC)			1mV	0.002-0.15V	10kHz	0.5Hz to 25kHz
10V-250V(AC)			1mV	0.002-0.15V	10kHz	0.5Hz to 25kHz

Table 7. *Period Input Parameters*

Input Range	Threshold Resolution	Threshold Range	Hysteresis Resolution	Hysteresis Range	Filter (3db Point)	Measured Period
100mV-30V (DC)	1mV	0.01-2.5V	1mV	0.01-1.5V	10kHz	40µsec to 50sec
20mV-30V (AC)			1mV	0.002-0.15V	10kHz	40µsec to 2sec
10V-250V (AC)			1mV	0.002-0.15V	10kHz	40µsec to 2sec

Table 8. *Pulse Width Input Parameters*

Input Range	Threshold Resolution	Threshold Range	Hysteresis Resolution	Hysteresis Range	Filter (3db Point)	Measured Pulse Width
100mV-30V (DC)	1mV	0.01-2.5V	1mV	0.01-1.5V	10kHz	0.2msec to 50sec

Table 9. *Frequency Range Minimum Span*

Maximum Frequency Range	Minimum Span
10Hz	0.1Hz
5kHz	1Hz
25kHz	25Hz

Ordering Information

Unit	Input	Output	Power	Options	Housings
SFY Functional Safety Frequency-to-DC Transmitter with Display	**PRG** Input Amplitudes Supported: 0.02-30Vac* 0.1-30Vdc* (Programmable with supplied configuration software, see Tables on Page 4 for details) **10-250V** (This Input Type Has No Hazardous Area Approvals) Input Amplitudes Supported: 10-250Vac* 0.1-30Vdc* (Programmable with supplied configuration software, see Tables on Page 4 for details) *AC indicates zero-crossing signal; DC indicates non-zero crossing signal	**4-20MA** User scalable with supplied software	**12-42DC** Loop-Powered	None	**BH2NG** (*) or (‡) Aluminum Explosion-Proof enclosure with two, ½-inch NPT entry ports and a glass cover **BH2TG** (*) or (‡) Aluminum Explosion-Proof enclosure with two, ¾-inch NPT entry ports and a glass cover **BH2MG** (*) or (‡) Aluminum Explosion-Proof enclosure with two, M20 x 1.5 entry ports and a glass cover **BH3NG** (*) or (‡) Aluminum Explosion-Proof enclosure with three, ½-inch NPT entry ports and a glass cover **BH3TG** (*) or (‡) Aluminum Explosion-Proof enclosure with two, ¾-inch NPT side-entry ports, one ½-inch NPT bottom-entry port, and a glass cover **BH3MG** (*) or (‡) Aluminum Explosion-Proof enclosure with two, M20 x 1.5 side-entry ports, one ½-inch NPT bottom-entry port, and a glass cover **SB2NG** (*) or (‡) 316 Stainless Steel 2-Hub, Explosion-Proof enclosure with two, ½-inch NPT entry ports and a glass cover **SB2MG** (*) or (‡) 316 Stainless Steel 2-Hub Explosion-Proof enclosure with two, M20 x 1.5 entry ports and a glass cover) **HP** Hockey-puck housing with spring clips for mounting in standard field enclosures **DN** Snap-in mounting for HP case on TS-32 DIN-rail **FL** Mounting flanges on HP suitable for relay track or surface-mounting **FLD** Mounting flanges on HP suitable for 3½" relay track mounting * **A** suffix (comes supplied with 2" pipe mount hardware) **A** suffix indicates ANZEx/TestSafe (Ex d) Flameproof approvals (i.e. BH2MG**A**) ‡ **P** suffix indicates enclosure comes equipped with base plate and U-bolts for mounting on a 2-inch pipe (i.e. BH2NG**P**) See BH and SB Datasheets for additional information.

When ordering, specify: Unit / Input / Output / Power / Options [Housing]
Model number example: SFY / PRG / 4-20MA / 12-42DC [BH2NGP]
Note: Only **PRG** Input Type Has Hazardous Area Approvals; No Approvals for **10-250V** Input.

Figure 4. *SFY HP Dimensions*

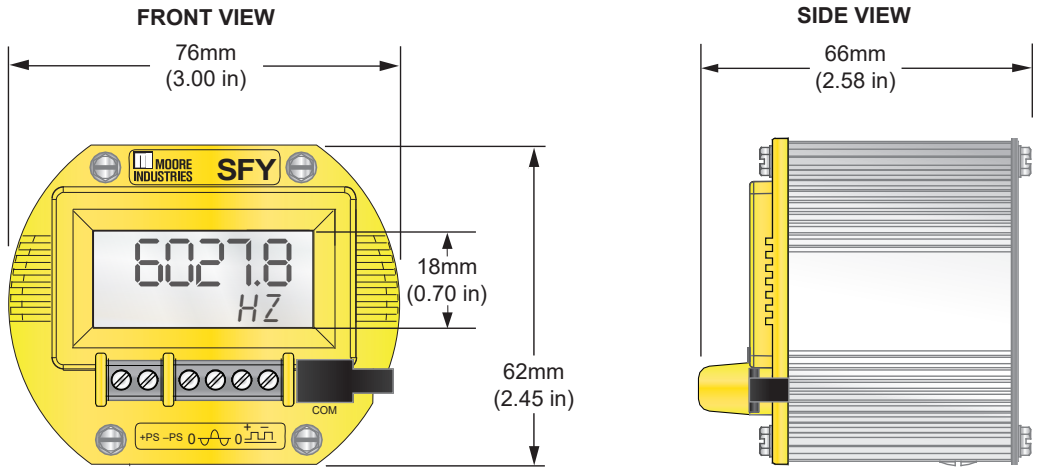
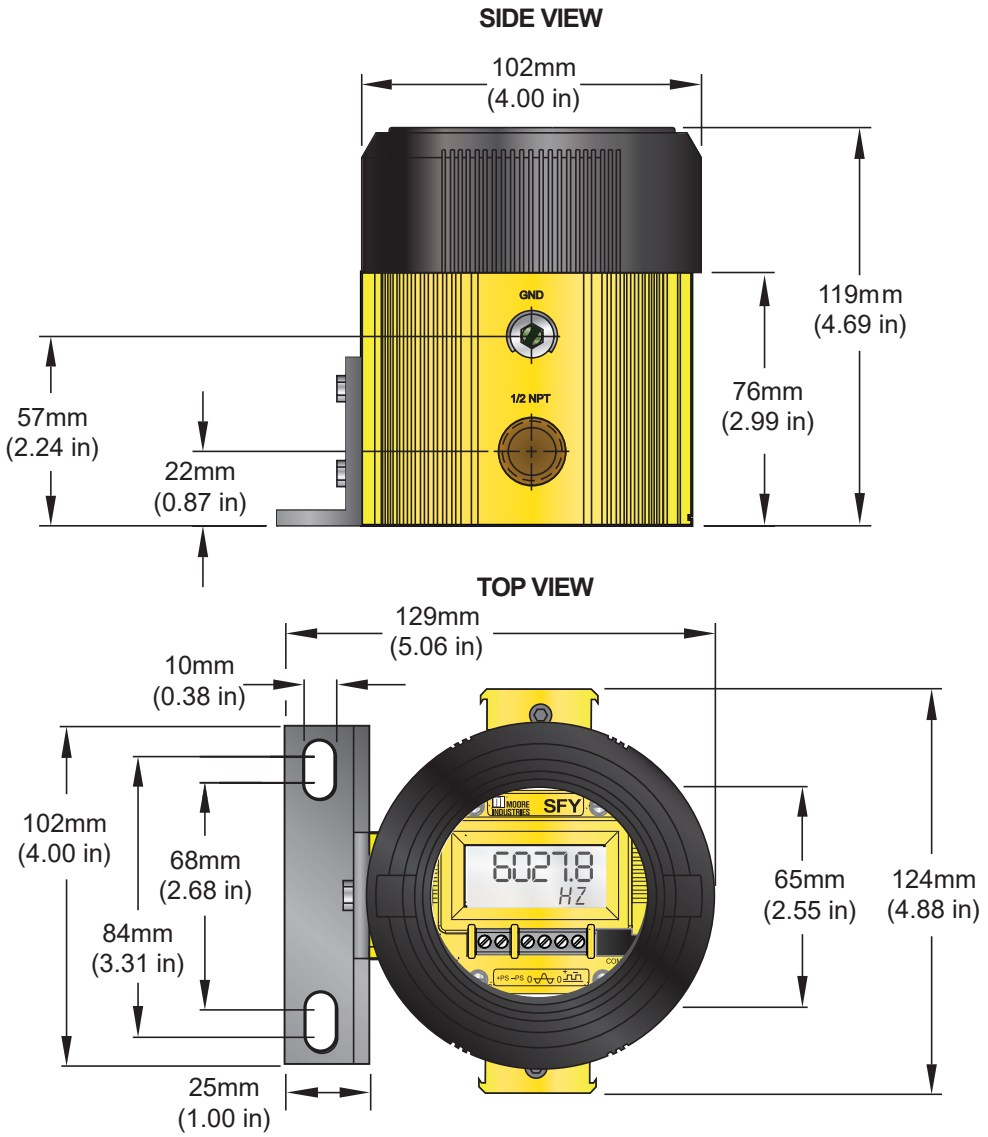
Figure 5. *BH Enclosure Dimensions*