MOORE INDUSTRIES WORLDWIDE

FS FUNCTIONAL SAFETY SERIES

SSX/SST

Safety Series Isolator and Splitter

July 2025

Description

Part of Moore Industries' **FS Functional Safety Series**, the exida® approved, SIL 3 capable 2-wire (loop powered) SSX and 4-wire (line/mains powered) SST Safety Isolators and Splitters provide isolation and signal conversion for your SIS (Safety Instrumented System) needs. These units protect and enhance loops and also pass valuable HART® data from the field transmitter to host systems and vice-versa.

Isolate your SIS from your Basic Process Control System or monitoring system so disconnections or failures to these secondary systems don't affect your safety system. FMEDA (Failure Mode Effects and Diagnostic Analysis) reports are available with the required safety data to ensure that risk reduction requirements are met (See Figure 1).

Protect your safety system from surges, spikes and transients in the field. With 1500Vrms isolating capability, the SSX/SST protects your safety I/O cards and system from the rigors of plant environments.

With built-in HART pass-through technology you can rest assured that when your loops use HART transmitters that critical and valuable HART diagnostic, process, and calibration information can be read on either side of the SSX/SST. Most all other isolators block and "strip off" the HART signal.

Figure 1. *The 2-wire SSX provides safety system isolation while still allowing valuable HART data to pass. -LMD option installed for loop continuity protection.*

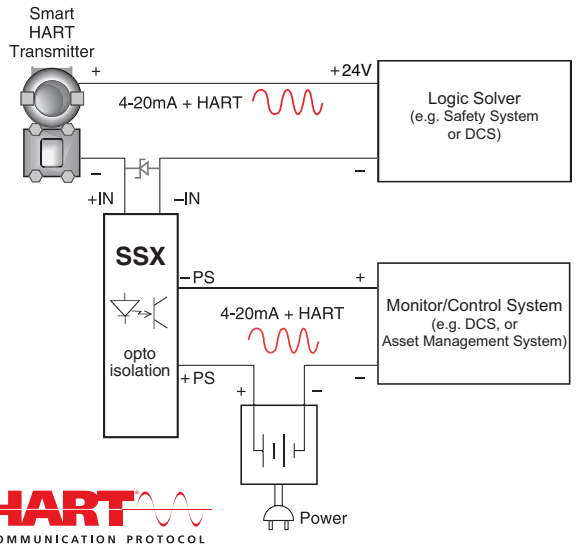

HART COMMUNICATION PROTOCOL

The rugged metal DIN housing *of the SSX/SST Safety Series Isolator and Splitter snaps securely onto Top Hat rails.*

Features

- **exida certified IEC 61508:2010.** exida has certified the SSX/SST for use in an SIS up to SIL 3 in monitor mode, where only the input circuit is part of the safety function. For single use mode, the SSX/SST is approved for use in an SIS up to SIL 2.
- **Comprehensive FMEDA certified safety data.** Upon request, exida-certified FMEDA data is provided to be used by a functional safety practitioner to determine the SST's and SSX's applicability in specific safety-related applications.
- **Valuable HART data not lost.** Both the SSX and SST pass critical HART data to asset management systems, programming devices or host systems.
- **Split signals between two locations.** The 4-Wire SST takes in one signal and gives you two fully isolated outputs that can be taken to two separate receiving devices. This facilitates maintenance on either output loop without losing the signal on the other output loop.
- **RFI/EMI Protection.** Standard 20V/m protection offered to protect against harmful effects of radio frequency and electromagnetic interference.
- **Transmitter excitation.** The 4-wire SST is capable of providing loop power to a 2-wire transmitter that is connected to its input.
- **Loop Maintenance Zener Diode Option.** Allows the SSX and SST to be removed from the loop for maintenance without interrupting your safety function.

Certifications (See Page 3 for details)

CERTIFIED exida IEC 61508 SIL 3 CAPABLE

CE

FM APPROVED c US

HART is a registered trademark of the HART Communication Foundation.

© 2025 Moore Industries-International, Inc.

2-Wire, Loop Powered SSX

The SSX is a 2-wire isolator, drawing power from the output side of the loop. Typically, this is from a secondary receiving device such as a DCS or PLC.

Isolation for Safety Systems

Use the SSX to isolate your SIS from your basic process control system. While power for the SSX is derived from the output side of the loop, disconnection or loss of power will not affect the input loop's signal integrity. This allows maintenance to be performed on the non-critical side of the loop (See Figure 2). The -LMD (Loop Maintenance Diode) option also allows the SSX to be removed from the loop without affecting the safety system.

Isolate and Pass Critical HART Data

When HART data is required for diagnostics, maintenance or calibration the SSX is able to isolate and pass HART data from the transmitter to the host system (See Figure 3).

Stop Ground Loop Noise and Convert Signals

Difference in potential between a grounded transmitter and a grounded receiving device may result in unpredictable ground loop problems that can lead to signal drift. The SSX breaks the galvanic path between the field instrument and receiving device and even converts signals when required (See Figure 4).

Solve "Bucking" Power Supplies and Filter HART

When two devices (such as a 4-wire HART transmitter and a DCS) are trying to source power to the same loop, the result is a non-functioning loop. When neither of the devices can be eliminated, the solution is an SSX. It can operate with powered inputs from both sides, thus restoring normal operations to the loop while also passing any HART signals. Sometimes older DCS and PLC input cards have trouble with HART signals. When this problem arises you can order the SSX with option code **-0HART** and the SSX will filter the HART signal (See Figure 5).

Figure 2. *The SSX provides isolation for your safety system and still allows maintenance on the output side of the loop. -LMD option installed for loop continuity protection.*

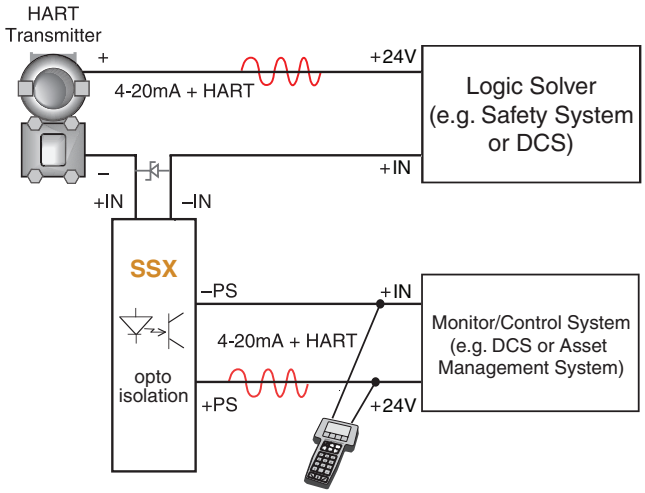

Figure 3. *The SSX passes HART data to asset management systems or other host control and monitoring systems.*

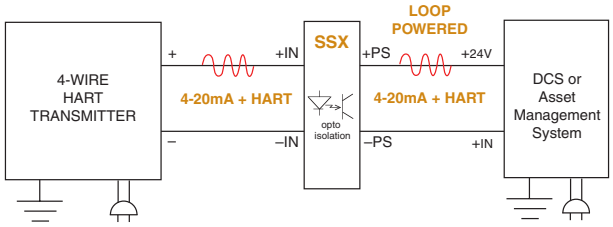

Figure 4. *The SSX can also serve as a signal converter.*

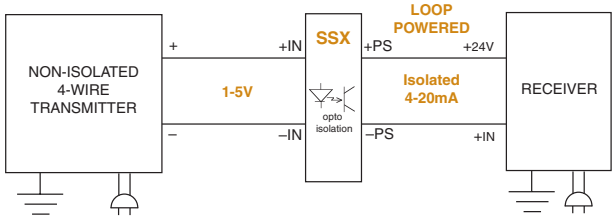

Figure 5. *The SSX solves bucking power supplies. Also, when used with the -0HART option, the SSX acts as a current isolator that stops a HART signal from reaching a PLC, DCS or other receiving device.*

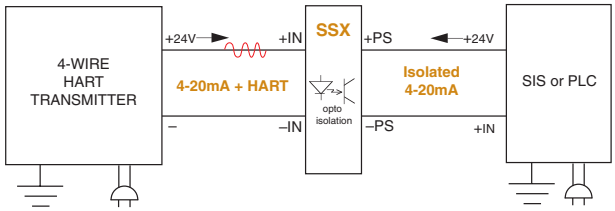

4-Wire Line/Mains Powered SST and SST Splitter

The SST is a 4-wire unit powered by 24DC, 117AC or 230AC. It is designed for applications where line/mains power is readily available, such as the back of a panel or inside of a control room.

HART Splitter: "Sharing" or "Splitting" Process Signals

The SST Splitter takes the input from one of your process signals and creates two identical, completely isolated outputs to two separate monitoring or control devices. Additionally, the SST functions as a HART splitter that passes valuable HART data to one or both of the SST's independent outputs. This is especially important when asset management systems need to maintain a digital HART connection with critical valves or instruments for diagnostic monitoring or calibration record keeping. This also makes it very convenient when using HART handhelds, modems or programming devices to configure remote field transmitters from control rooms (See Figure 6).

The -LMD option is also available on the SST, which allows the isolator to be taken out of the loop with without affecting the integrity of the SIF (Safety Instrumented Function) loop.

Power a 2-Wire Transmitter

With the included -TX option, the SST provides 24V power to a 2-wire, output-loop powered instrument. This eliminates the need for an additional power supply (See Figure 7).

Single- and Multiple-Unit Instrument Enclosures

Designed to meet NEMA 4X and IP66 ratings, the R-BOX is the perfect solution for protecting the SST/SSX in field and control room applications. Rugged and versatile, it delivers a high impact structure and resistance to ultraviolet rays and chemicals. The R-BOX mounts on a pipe, panel or surface, and comes in a variety of widths to economically accommodate several SSTs or SSXs. It features a pre-installed mounting rail; customizable conduit entry options; a clear cover and a secure locking mechanism. For more information, see the R-BOX Field-Mount Enclosure datasheet (See Figure 8).

Figure 6. *The SST Splitter takes one process signal and delivers two completely isolated signal outputs. HART data can be passed to one or both outputs (model with -2 HART option shown).*

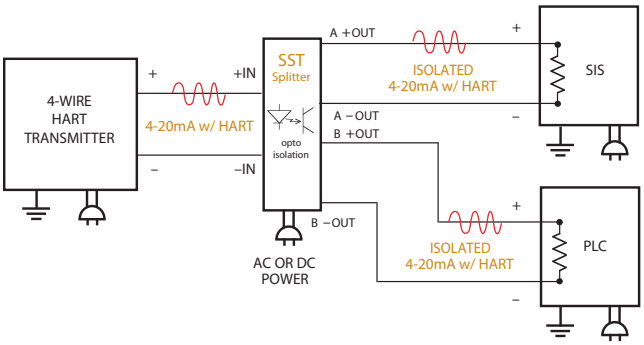

Figure 7. *The standard -TX Transmitter Excitation of the SST allows it to supply loop power to a 2-wire transmitter.*

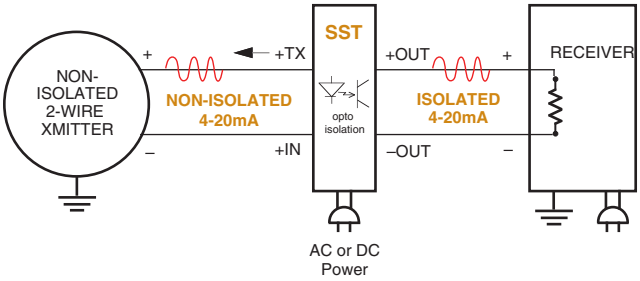

Figure 8. *Available in a variety of widths, our R-BOX field-mount instrument enclosure is designed to protect DIN-rail instruments in even the most rugged environments*

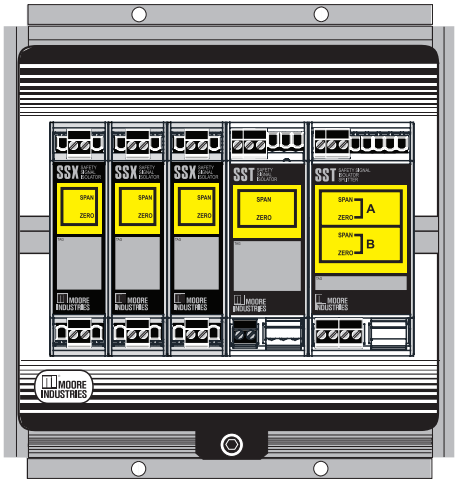

Certifications

exida Certified - IEC 61508 2010
Functional Safety of Electrical/Electronic/Programmable Electronic Safety-Related Systems

CE Conformant - EMC Directive 2014/30/EU EN61326; Low Voltage Directive - 2014/35/EU EN61010

FM Approvals (FM Global):
Non-Incendive - Class I, Division 2, Groups A, B, C and D
Temperature Class T4, Tamb = -40°C to +85°C

SSX/SST FS FUNCTIONAL SAFETY SERIES

Safety Series Isolator and Splitter

Specifications

Performance
Accuracy: ±0.1% of span
Stability: +/-0.2% of reading per year
Isolation: SSX: 500Vrms between Input, Output and Case; SST: 500Vrms Between Input, Output(s)*, Case and Power
Tested To: SSX: 1500Vrms between Input, Output and Case for 1 minute; SST: 1500Vrms between Input, Output(s)*, Case and DC Power for 1 minute (2300Vrms from AC Power to Input, Output and Case for 1 minute)
Response Time (analog output): 100msec max. to 99% of output
Input Resistance:
Current: 100Ω standard; 250Ω with -IZ250 option
Voltage: 1 Mohm
Input Overrange
Protection: 250% of full scale
Ripple: <10mV measured across a 250 ohm resistor
Load Effect: 0.01% of span from 0-100% of rated output (current only)
Power Supply: SST: 24DC ±10%; 117AC 50/60HZ, ±10%; 230AC 50/60HZ, ±10%; SSX: 12-42DC; TX Supply 24V +/-15% @24mA (regulated)

Performance (continued)

Power Consumption:
SST: Single channel: 3 watts max.; Dual output channel: 5 watts max.
Power Supply Effect:
<0.05% of Span
Power Supply Rejection:
Exceeds 90db for current input units
Load Capability:
SSX: $\frac{\text{Vs} - 12\ \text{Vdc}}{20\text{mA}}$

SST: 1000 ohms
SST-Splitter: 600 ohms per channel
Output Current Limiting: 25mA typical; 30mA max.
Voltage Limit (for -EP only): 30Vdc max.
Output Tracking: Assuming 4-20mA input and 4-20mA output; the SST isolator output will follow the input down to 0mA when the input fails; the SSX isolator output will follow the input below 3mA when the input fails.

Ambient Conditions
Temperature Range: Operating: -40°C to +85°C (-40°F to +185°F); Storage: -40°C to +85°C (-40°F to +185°F)
Temperature Effect: ±0.007% of span/°C typical; ±0.015% of span/°C max; Ambient Temperature Reference Conditions for Specifications: 25°C
Relative Humidity: 5-95% non-condensing

RFI/EMI Protection: Less than +/- 0.1% of span error when tested at 20V/m @ 20-1000MHz

Common Mode Rejection: Exceeds 95dB at 60Hz with a limit of 1500Vrms

Adjustments

Type: Front panel pots
Span: ±2%
Zero: ±2%

Weight

SST: DC:12oz (340g), AC: 17oz (482g)
SST-Splitter: DC: 15oz (425g), AC: 20oz (567g)
SSX: 8oz (227g)

*For SST Splitter: between Output A and Output B

Ordering Information

Unit	Input	Output	Power	Options	Housing
SST 4-wire, Line-(Mains) Powered, Safety Isolator and Splitter	**4-20MA** 4-20mA into 100 ohms with HART digital data superimposed **1-5V*** into 1 Mohm	**4-20MA** Isolated, 4-20mA into 1000 ohms (with 24Vdc, 117Vac, or 230Vac power); with HART digital data superimposed **2X4-20MA** into 600 ohms per channel (available with 4-20mA input only); On standard model HART digital data superimposed on Channel A	**24DC** ±10% **117AC** 50/60HZ, ±10% **230AC** 50/60HZ, ±10% 3 watts maximum for single channel models; 5 watts maximum for dual output channel models	**-IZ250**** (N/A with -0HART) Increases the input resistance to 250 ohms **-EP***** External power, outputs powered by external source (only available on 2X4-20mA output models) **-0HART** No HART signal pass-through **-2HART***** HART signal pass-through on both channels **-RO***** Reverse Output (both channels) **-LMD**** Loop Maintenance Diode (for Current Input Only). Allows removal of SST from the loop without interrupting loop continuity. (This option increases the loop burden to 8.2V when the SST is removed).	**DIN** DIN-style housing mounts on 35mm (EN50022) Top Hat DIN-rails **FLB** Flange bracket provides a secure mount for high vibration applications
SSX 2-wire, Loop-Powered, Safety Isolator	**4-20MA** 4-20mA into 100 ohms with HART digital data superimposed **1-5V*** into 1 Mohm	**4-20MA** Isolated, 4-20mA into 600 ohms (with 24Vdc power); with HART digital data superimposed	**12-42DC**	**-IZ250**** (N/A with -0HART) Increases the input resistance to 250 ohms **-0HART** No HART signal pass-through **-LMD**** Loop Maintenance Diode (for Current Input Only). Allows removal of SSX from the loop without interrupting loop continuity. (This increases the loop burden to 8.2V when the SSX is removed).	

When ordering, specify: Unit / Input / Output / Power / -Option [Housing]
Model number examples: SST / 4-20MA / 2X4-20MA / 24DC / -EP [DIN]
SSX / 4-20MA / 4-20MA / 12-42DC / -IZ250 [DIN]

***HART pass-through not available for 1-5V Input models**
****-IZ250 and -LMD only available for 4-20mA Input models**
*****-EP, -RO and -2HART only available for 2X4-20mA Output models**

Accessories:

Part Number	
700-702-36	**FMEDA Report** consistent with IEC 61508-2: 2010 providing the information necessary to design a Safety Instrumented System (One copy provided free with each order Upon Request)

Page 4

Figure 9. *Dimensions of the SSX Isolator in its aluminum DIN-style housing*

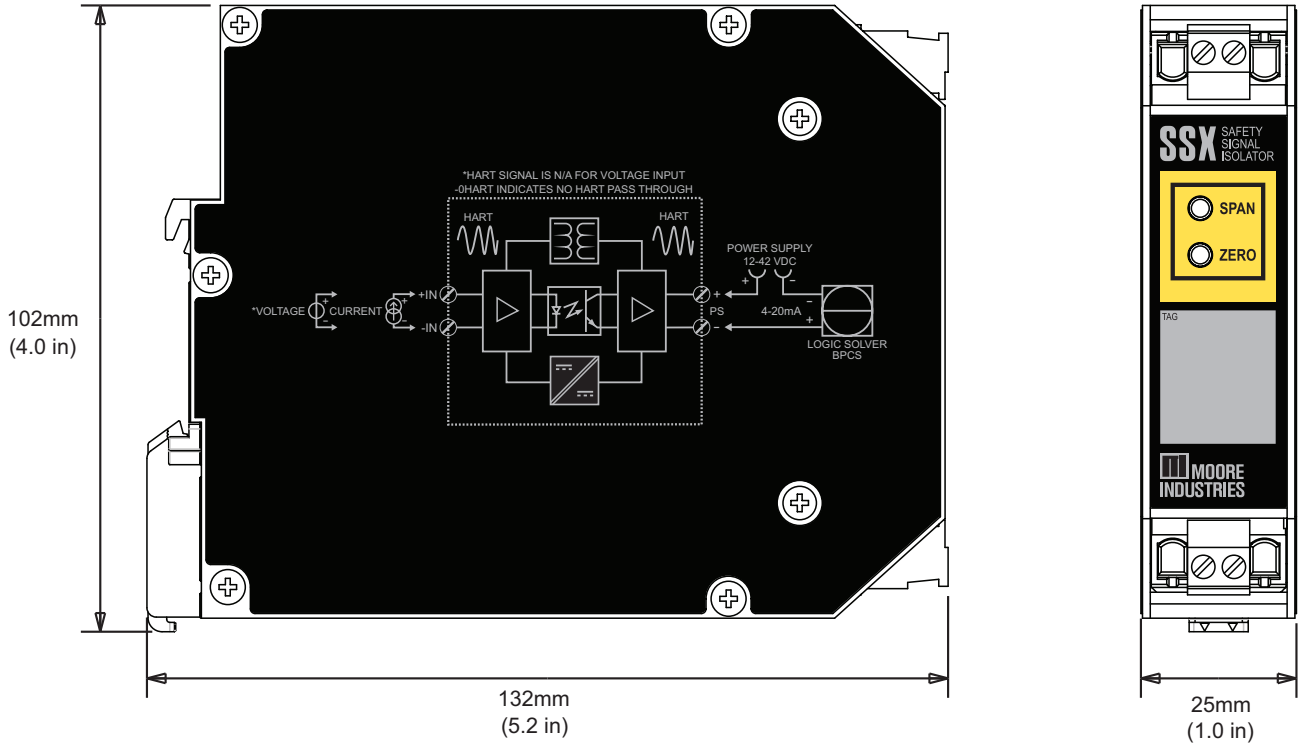

Figure 10. *Dimensions of the SST (AC) Isolator in its aluminum DIN-style housing*

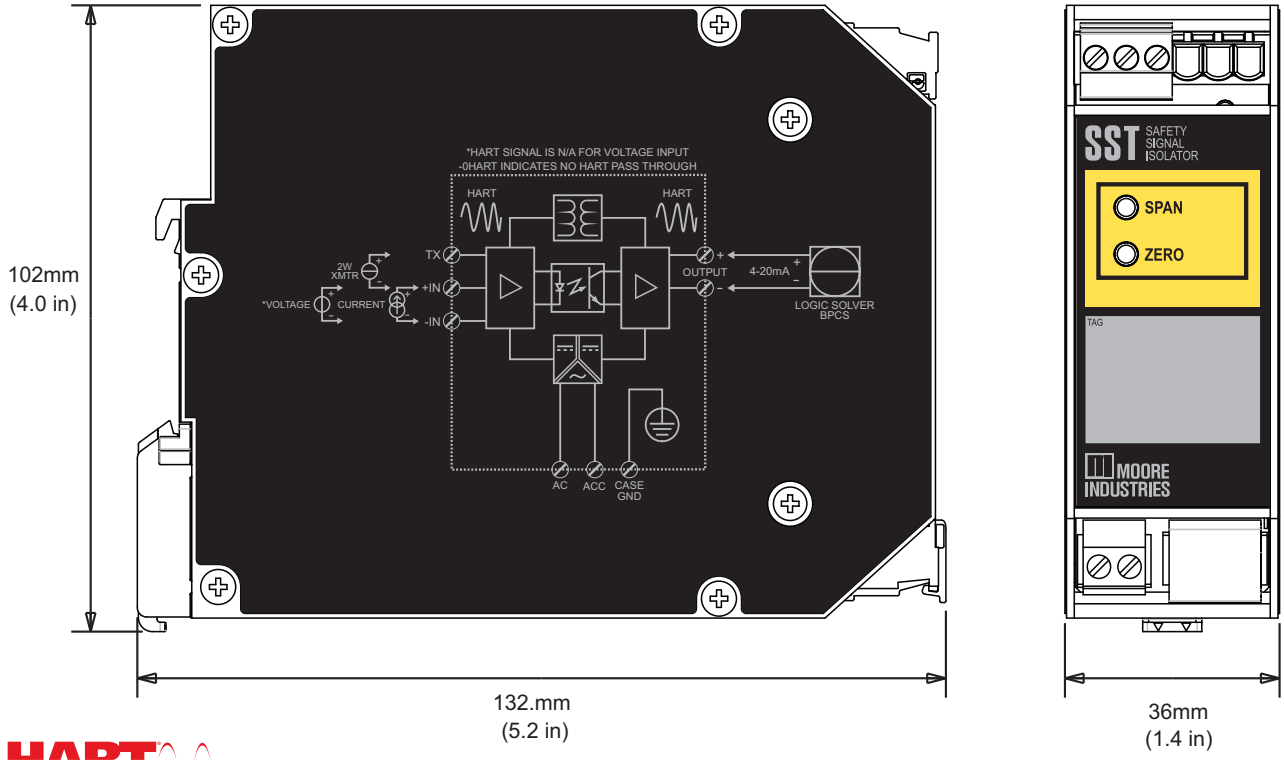

HART COMMUNICATION PROTOCOL

Page 5

Figure 11. *Dimensions of the SST Splitter (AC) in its aluminum DIN-style housing*

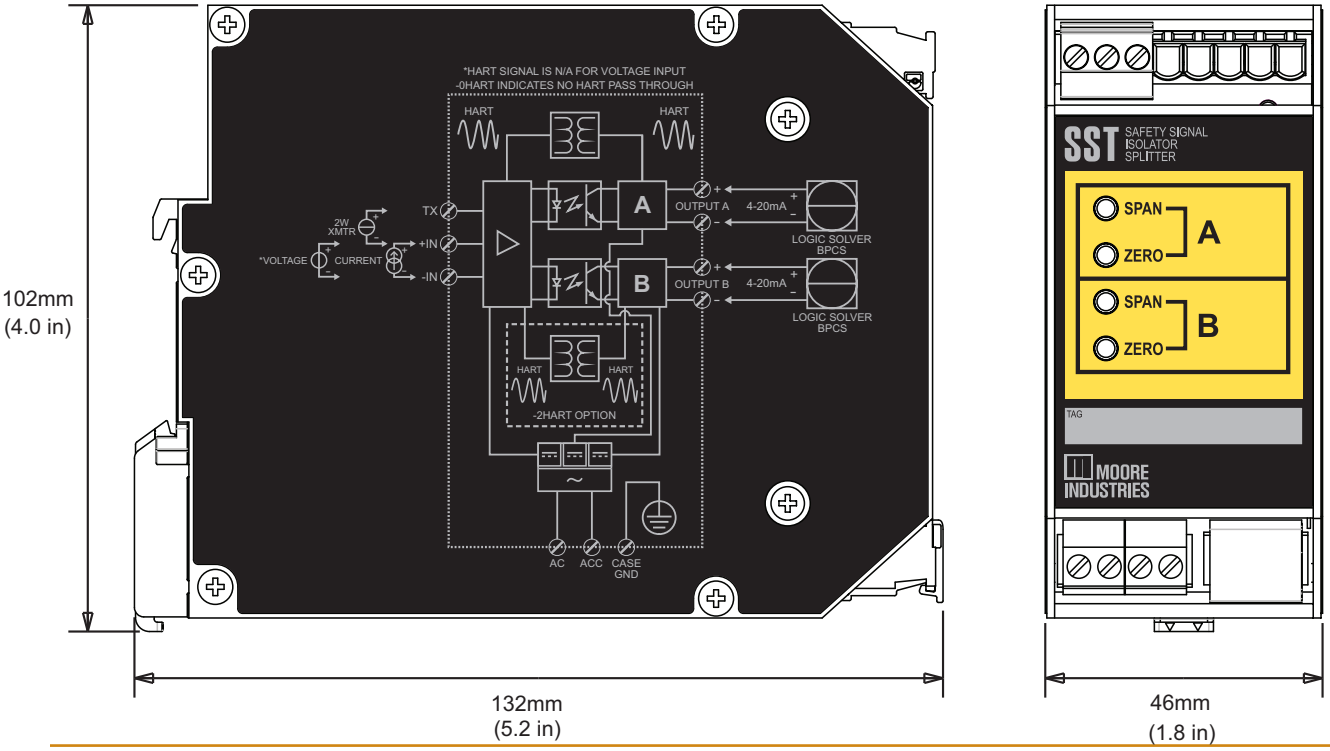

Figure 12. *The SST Splitter and the SST and SSX Isolators mounted with the FLB flange bracket and the bracket's dimensions.*

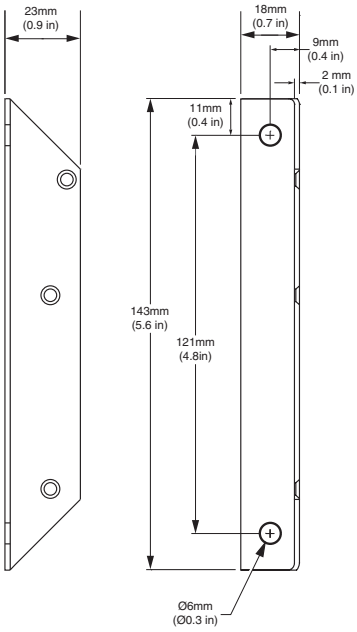

Figure 13. *Terminal Designations*

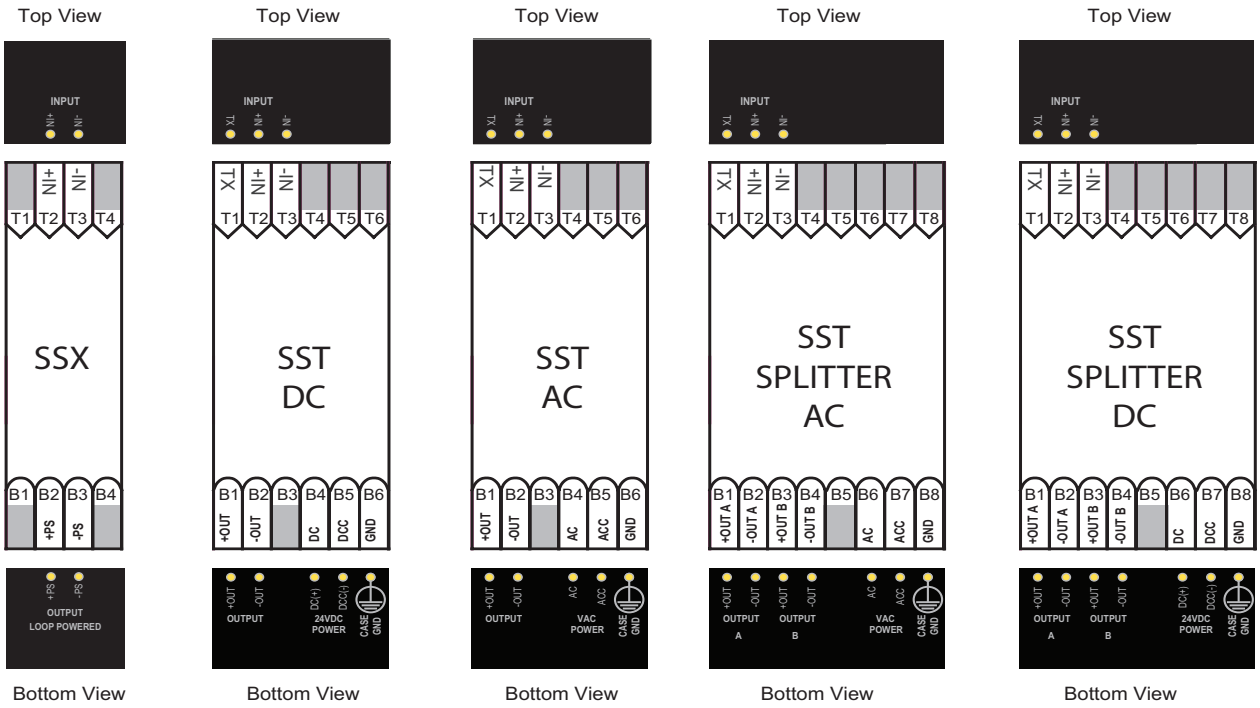

More Functional Safety Product Solutions

STA Functional Safety Trip Alarm

The exida® certified SIL 2/3 capable STA Safety Trip Alarm performs as a logic solver and acts on potentially hazardous process conditions in your SIS. The STA models accept a signal input from transmitters, temperature sensors and a wide array of other monitoring and control instruments.

Features:

- Dual process alarms, one fault alarm
- Site-programmable with password protection
- Combined alarm trip and transmitter
- Large 5-digit process and status readout

More Functional Safety Product Solutions

SRM Functional Safety Relay Module

The exida® certified SIL 2 capable SRM Safety Relay Module provides a high level of availability for safety-critical applications within your SIS. The SRM is a relay repeater that accepts a single contact closure input from a logic solver, such as the STA Safety Trip Alarm, and provides three relay outputs per alarm input. This allows you to simply and cost effectively add additional alarm contacts to your safety system.

Features
- Visual front panel diagnostic information
- Internal input snubbing diode
- Fuse protected input power and relays

STZ Functional Safety Dual Input Smart HART® Temperature Transmitter

Part of Moore Industries' FS Functional Safety Series, the SIL 2 and SIL 3 capable STZ Functional Safety Dual Input Smart HART® Temperature Transmitters for your SIS configure quickly and easily to accept a single or dual input from a wide array of sensors and analog devices located in hazardous and nonhazardouls areas.

Features
- exida® certified to IEC 61508:2010
- Comprehensive FMEDA certified safety data
- AIS option
- Dual sensor input
- HART 7 compliant & HART Access Control
- 20-bit input resolution delivers exceptional digital accuracy
- HART & DTM Programmable
- Device Intelligence
- Resistance and Potentiometer Devices
- Direct Millivolt sources
- Accepts 14 RTD types, 9 thermocouple types

Specifications and information subject to change without notice.