MOORE INDUSTRIES WORLDWIDE

HIT/HIX

HART® Isolator

June 2025

Description

Moore Industries' HART® Isolators provide highly economical solutions to common and costly problems that plague many of today's "smart" process loops. Protect and enhance your HART investment with the 2-wire (loop powered) HIX or the 4-wire (line-mains powered) HIT.

Protection from surges, spikes and transients of up to 1500Vrms safeguards I/O cards. Add the isolating capability of a HART Isolator to a loop to break the common galvanic path that can pass dangerous overloads from DCS to transmitter to PLC or vice-versa– even when the equipment is supposedly "isolated" already.

Perform equipment maintenance without loop downtime with area isolation. Placing current-driven or HART devices on isolated legs of a loop makes it possible to remove those instruments from the circuit without affecting other equipment.

Safely share the HART output of one transmitter with a secondary control or recording device. This allows for redundancy without further burden on – or risk to – a process loop.

Figure 1. *The 2-Wire HIX is an ideal, low-cost way to get one HART signal to two receiving devices SAFELY.*

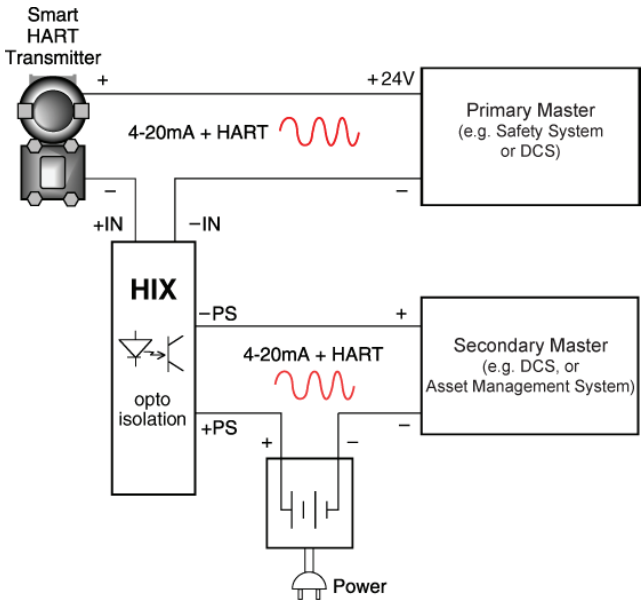

The compact DIN housing *of our HART Isolators snap on to either Top Hat or G-type mounting rails.*

Features

- **Share one HART signal safely.** Avoid the substantial costs of having to install and configure separate instrument loops for each HART Transmitter-Master pair in use.
- **Get premium isolation at an economy price.** Safeguard expensive I/O cards with protection. Spend just a little for a HART Isolator, and be free from worry over damage from transients, spikes or surges up to 1500Vrms.
- **Troubleshoot DCSs that use non-isolated HART transmitters.** 90 percent of all HART transmitters in use are isolated. If your application uses one of the 10 percent that isn't, a simple ground loop or ambient electronic noise source can wreak havoc. Economical HART Isolators are snap-in solutions for these kinds of problems.
- **Transmitter excitation.** The 4-wire HIT is capable of providing loop power to a 2-wire transmitter that is connected to its input.
- **Rugged housing.** The products can be housed in a durable aluminum case or an R-BOX field-mount instrument enclosure.

Certifications (HIX Only)

Non-Incendive – Class I, Division 2; Groups ABCD
Temperature Code:
T4A @ -20°C to +70°C Ambient Temperature

CE Conformant – EMC Directive 2014/30/EU
EN 61326

HART® is a registered trademark of FieldComm Group.

©2025 Moore Industries-International, Inc.

HIT/HIX

HART® Isolator

2-Wire, Loop Powered HIX and 4-Wire Line/Mains Powered HIT

The HIX is a 2-wire isolator, drawing power from the output side of the loop. Typically, this is from a secondary receiving device such as a DCS or PLC. The HIT is a 4-wire unit powered by 24DC, 117AC or 230AC. It is designed for applications where line/mains power is readily available, such as the back of a panel or inside of a control room. All line/mains powered units come standard with transmitter excitation that can power loop-powered transmitters connected to the input.

Isolate and Pass Critical HART Data

When HART data is required for diagnostics, maintenance or calibration the HIX is able to isolate and pass HART data from the transmitter to the host system (See Figure 2).

Stop Ground Loop Noise

Difference in potential between a grounded transmitter and a grounded receiving device may result in unpredictable ground loop problems that can lead to signal drift. The HIX breaks the galvanic path between the field instrument and receiving device (See Figure 3).

Solve "Bucking" Power Supplies

When two devices (such as a 4-wire HART transmitter and a DCS) are trying to source power to the same loop, the result is a non-functioning loop. When neither of the devices can be eliminated, the solution is an HIX. It can operate with powered inputs from both sides, thus restoring normal operations to the loop while also passing any HART signals (See Figure 4).

Divert and Protect (Area Isolation) Signals

Using the HIX, you can send the output from one transmitter to a second location, protect expensive monitoring/control equipment by eliminating common electrical paths or create a buffer between devices to allow interruption of one leg of a loop without impacting the other (Figure 5).

Figure 2. *The HIX passes HART data to asset management systems or other host control and monitoring systems.*

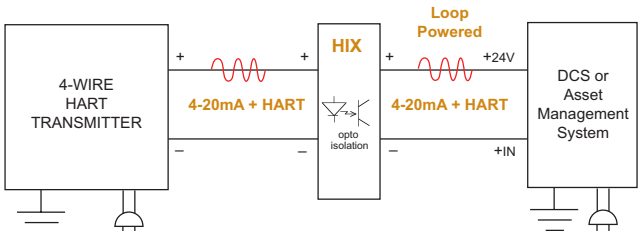

Figure 3. *The HIX breaks the galvanic path between the field instrument and receiving device.*

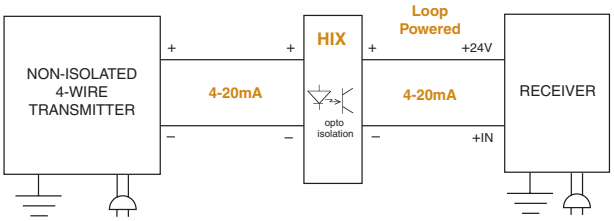

Figure 4. *The HIX solves bucking power supplies that are caused when two devices attempt to source power on each side of the HIX.*

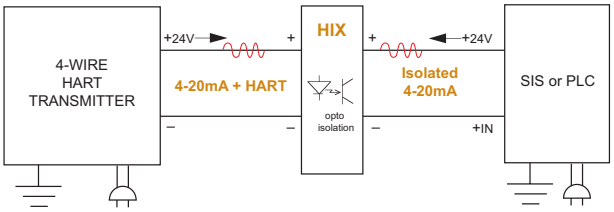

Figure 5. *Divert a process signal, or protect expensive equipment by eliminating a common electrical path.*

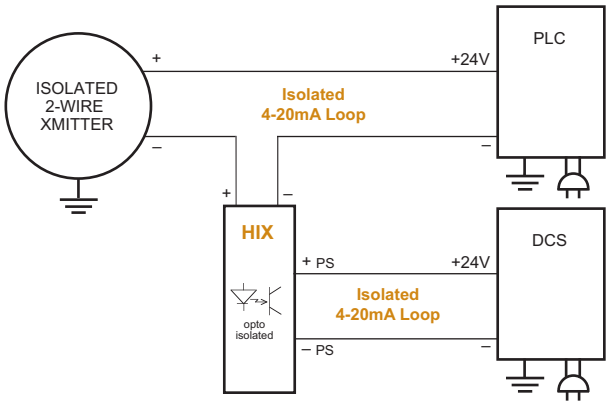

Power a 2-Wire Transmitter

With the standard 2-wire transmitter excitation, the HIT provides 24V power to a 2-wire, output-loop powered instrument. This eliminates the need for an additional power supply (See Figure 6).

Safeguard Expensive I/O Cards from Overloading

Transient spikes hitting loop wiring can create a damaging voltage surge to the input of a DCS or other Asset Management System. Through the isolation offered by the HIT/HIX, you can assure that your equipment stays clear of transients, surges and spikes (See Figure 7).

Single and Multiple Unit Instrument Enclosures

Designed to meet NEMA 4X and IP66 ratings, the R-BOX is the perfect solution for protecting the HIT/HIX in field and control room applications. Rugged and versatile, it delivers a high impact structure and resistance to ultraviolet rays and chemicals. The R-BOX mounts on a pipe, panel or surface, and comes in a variety of widths to economically accommodate several HITs or HIXs.

It features a pre-installed mounting rail, customizable conduit entry options, a clear cover and a secure locking mechanism (See Figure 8).

Need Isolation for an SIS?

SSX and SST Isolators and Splitters

The exida® approved, SIL capable SSX and SST Safety Series Isolators and Splitters provide isolation and signal conversion for your SIS (Safety Instrumented System) needs. The 2-wire (loop powered) SSX and 4-wire (line/mains powered) SST protect and enhance loops and also pass valuable HART data from the field transmitter to host systems and vice-versa.

The SSX and SST are part of Moore Industries' **FS Functional Safety Series** of products that are designed and built in compliance with IEC 61508, the leading worldwide functional safety standard. In addition to our FS Series of products, FMEDA (Failure Modes Effects and Diagnostic Analysis) reports are available on many of our products used in safety applications.

Figure 6. *The standard -TX Transmitter Excitation of the 4-wire (line/mains powered) HIT allows it to supply the loop power for a 2-wire transmitter.*

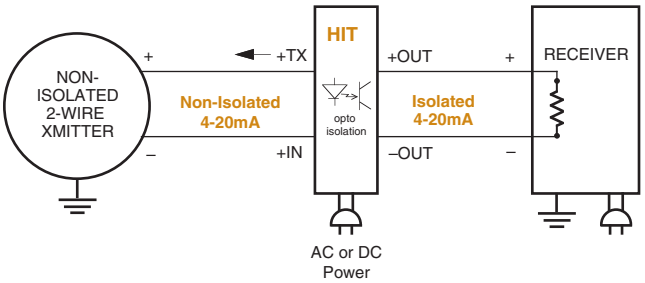

Figure 7. *The isolation of the HIT/HIX can protect expensive input cards from being damaged by unexpected transients, surges and spikes.*

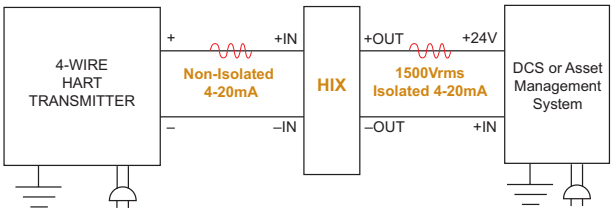

Figure 8. *Available in a variety of widths, our R-BOX field-mount instrument enclosure is designed to protect DIN-rail instruments in even the most rugged environments.*

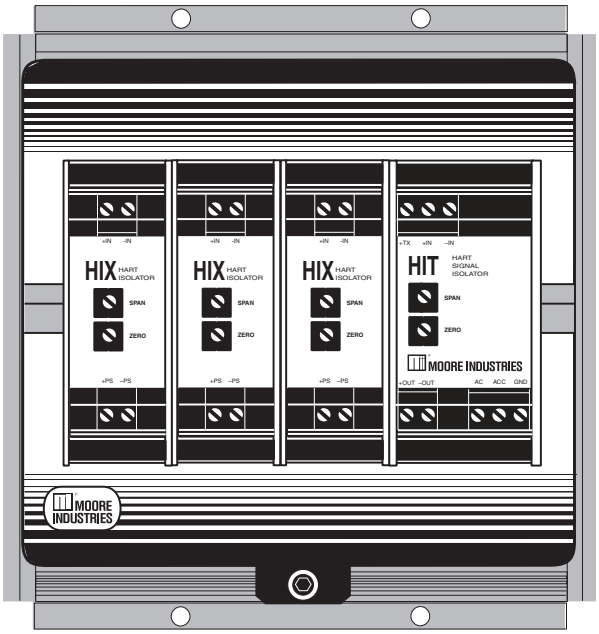

Specifications

Performance

Accuracy: ±0.1% of span
Stability: ±0.2% of reading per year
Isolation:
HIX: 500Vrms between input, output and case
HIT: 500Vrms between input, output, case and power
Tested To:
HIX: 1500Vrms between input, output and case for 1 minute
HIT: 1500Vrms between input, output, case and DC Power for 1 minute (2300Vrms from AC power to input, output and case for 1 minute)
Common Mode Rejection:
Exceeds 95dB at 60Hz with a limit of 500Vrms
Input Impedance:
250 ohms nominal, 100 ohms with **-IZ100** option

Performance (continued)

Input Overrange Protection:
250% of full scale
Output Current Limiting: 25mA typical; 30mA maximum
TX Power Supply: 24Vdc, ±10% @ 24mA (regulated)
Ripple: <10mV for HIX and HIT DC and <35mV for HIT AC when measured across 250 ohm resistor
Burden: 5V, maximum
Load Capability:

$$\frac{Vs - 12Vdc}{20mA}$$

Response Time (analog output): 100msec maximum to 99% of output

Output Tracking:
Assuming 4-20mA input and 4-20mA output; the HIT isolator output will follow the input down to 0mA when the input fails (3.3mA for -LL option); the HIX isolator output will follow the input below 3mA when the input fails.

Ambient Conditions

Temperature Range:
-20°C to +85°C
(-4°F to +185°F)

Effect: ±0.007% of span/°C typical; ±0.015% of span/°C maximum
Ambient Temperature Reference Conditions for Specifications: 25°C
Humidity: 5-95% non-condensing
RFI/EMI Protection: Less than +/- 0.1% of span error when tested at 10V/m @ 80-1000Mhz; 20V/m @ 80-1000Mhz for -RF option

Adjustments

Type: Front panel pots
Span: ±10%
Zero: ±5% (non-interactive when span is set first)

Weight

HIT: DC 283 g (10 oz), AC 425 g (15 oz)
HIX: 198 g (7 oz)

Ordering Information

Unit	Input	Output	Power	Options	Housing
HIT 4-wire, Line-(Mains) Powered, HART Isolator with Transmitter Excitation	**4-20mA** 4-20mA into 250 ohms with HART digital data superimposed	**4-20mA** Isolated, 4-20mA into ≤1000 ohms (with 24Vdc, 117Vac, or 230Vac power); HART digital data superimposed	**24DC** ±10% **117AC** 50/60HZ, ±15% **230AC** 50/60HZ, ±15% 2 Watts power consumption	**-RF** 20V/M RFI/EMI Immunity @ 80-1000MHz, 1KHz AM **-IZ100** reduces the input resistance to 100 ohms **-LL** keeps the output from going below 3.3mA when the input goes to 0.0mA	**DIN** Aluminum DIN-style housing mounts on 32mm G-type (EN50035) and 35mm Top Hat (EN50022) rails **FLB2** Flange mount bracket for wall mounting
HIX 2-wire, Loop-Powered, HART Isolator	**4-20mA** 4-20mA into 250 ohms with HART digital data superimposed	**4-20mA** Isolated, 4-20mA into ≤600 ohms (with 24Vdc power); HART digital data superimposed	**12-42DC**	**-IZ100** reduces the input resistance to 100 ohms	**DIN** Aluminum DIN-style housing mounts on 32mm G-type (EN50035) and 35mm Top Hat (EN50022) rails **FLB2** Flange mount bracket for wall mounting

When ordering, specify: Unit / Input / Output / Power / -Option [Housing]
Model number examples: HIX / 4-20MA / 4-20MA / 12-42DC / [DIN] and HIT / 4-20MA / 4-20MA / 117AC / -RF [DIN]

Figure 9. *Dimensions of the HIX and HIT HART Isolators in their Aluminum Housings*

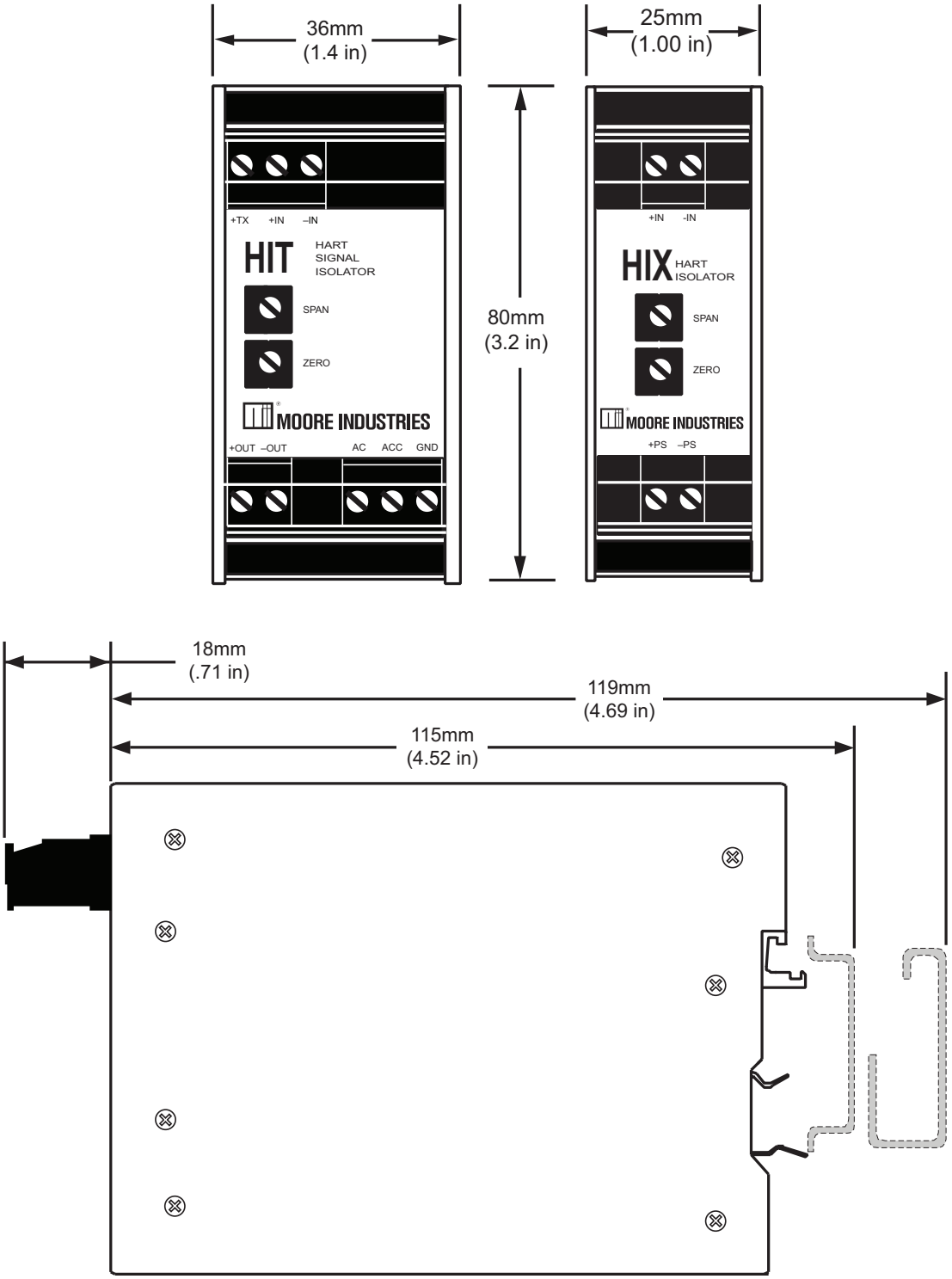

Figure 10. *The HIX and HIT Isolators mounted with the FLB2 flange bracket and the bracket's dimensions.*

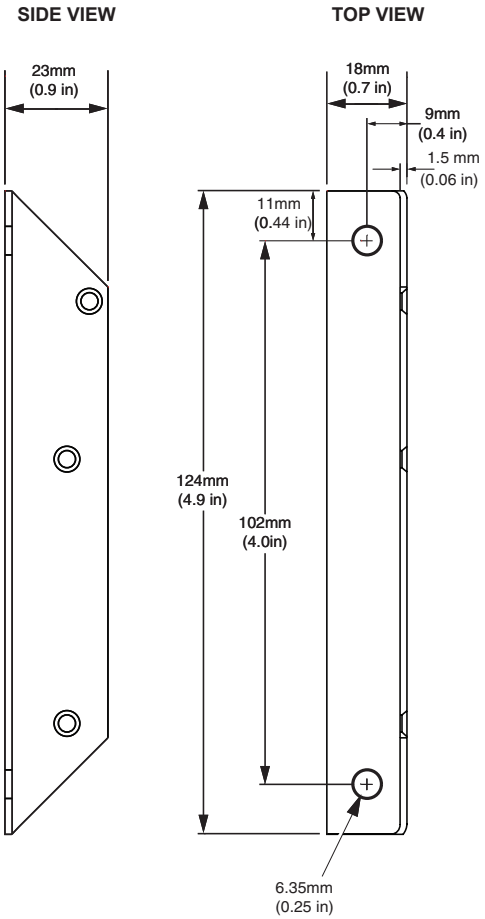

Specifications and information subject to change without notice.