MOORE INDUSTRIES WORLDWIDE

THZ³ & TDZ³

Dual Input Smart HART®
Temperature Transmitter

August 2026

Description

Moore Industries' Dual Input Smart HART® Temperature Transmitters configure quickly and easily to accept a direct signal input from a wide array of sensors and analog devices located in hazardous and non-hazardous areas:

- **14 RTD Types**
- **9 Thermocouple Types**
- **Resistance and Potentiometer Devices**
- **Direct Millivolt Sources**

These 2-wire (loop-powered) transmitters provide an isolated and linear 4-20mA output proportional to the input. This signal is ready for direct interface with HART or non-HART based DCS, PLC and other computer-based SCADA systems.

Figure 1. *Available models provide single or dual programmable inputs with a fully-isolated and linear analog output.*

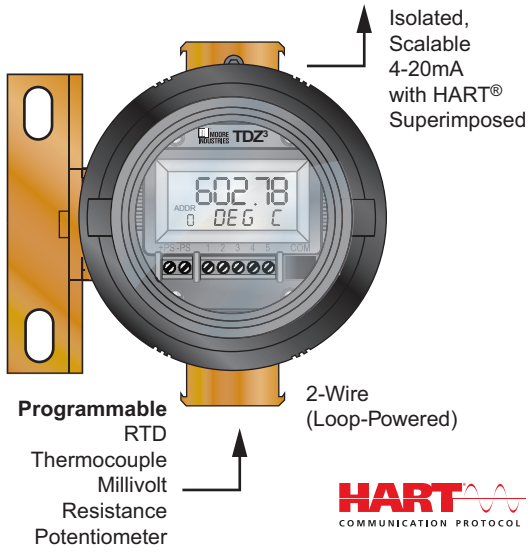

Certifications (see Page 16 for details)

FM APPROVED · IECEx · CE · ANZEx

All product names are registered trademarks of their respective companies.
HART is a registered trademark of the HART Communication Foundation.

*High-accuracy measurements are achieved by using a 4-wire, 1000 ohm platinum RTD with a span of 100°F (50°F minimum) calibrated in our sensor-matching calibration bath.

The THZ³/TDZ³ family. *Mounting choices include field enclosures, compact connection heads and a high-density DIN-style housing. THZ³-DIN with -AIS option shown in the inset.*

Features

- **Dual sensor input** for Backup and Failover Protection, Average and Differential measurement and Low or High Select.
- **Device Intelligence** including Sensor Drift and Corrosion Detection, Smart Range Alarms, High-availability option, and Input Simulation capability.
- **AIS option** allows direct connection of sensors located in hazardous locations without the requirement of an intrinsically safe barrier. This option has blue terminals, DIN housing only.
- **HART 7 compliant** with exception-based reporting and dynamic variable mapping.
- **Input-to-output analog accuracy of up to ±0.014°C (±0.025°F)*** is the absolute best in the industry.
- **20-bit input resolution delivers exceptional digital accuracy** of ±0.1°C (±0.18°F) with all Pt RTDs or up to ±0.05°C (±0.09°F)* for Pt1000 RTDs.
- **HART & DTM Programmable with user-oriented basic configuration** for fast and accurate setup. HART configurable via any HART handheld configurator or HART compatible host. Additionally program or monitor with any FDT compliant host or program, such as PACTware, utilizing our DTM.
- **Standard integral display on the model TDZ³ shows real-time process status** and valuable loop diagnostic information.
- **Advanced RFI/EMI protection and ambient temperature compensation** guard against environmental factors that can quickly degrade measurement accuracy.

©2026 Moore Industries-International, Inc.

THZ^3 & TDZ^3

Dual Input Smart HART®
Temperature Transmitter

Dual Sensor Input Gives You Expanded Measurement Capability and Protection

With Dual Input sensors, the THZ^3 and TDZ^3 simplify your operations with advanced features that give you far more control over your temperature measurements (see Figure 2). Each sensor is individually selectable and programmable.

- **Backup and Fail-Over Protection** allows either of the sensors or inputs to be designated as the primary measurement, with the secondary input acting as the backup sensor in case of primary sensor failure.
- **Average and Differential Measurement** allows you to average the two input measurements or select the differential (A-B or B-A) or absolute differential between the two inputs.
- **High-Select and Low-Select Feature** enables the transmitter to continuously monitor two separate inputs and designate either the highest or lowest input to represent the analog output.
- **Dynamic Variable Mapping** permits the user to assign either input or the calculated result of inputs to any of the four HART variables (PV, SV, TV or QV) that can be read by any HART-compatible host system.

Figure 2. *When reading critical temperatures in a critical batch processing vessel, fail-over protection allows the secondary input of the Dual Input TDZ^3 to act as a back-up sensor when the primary sensor fails.*

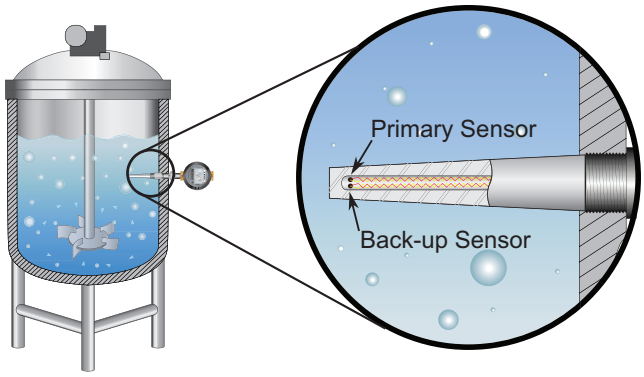

Multidrop Networks Save Wiring Costs

Any combination of THZ^3 and TDZ^3 Smart transmitters can be connected in parallel onto a HART digital communication link (see Figure 3). This means you can use a single loop, instead of separate loops, to connect multiple transmitters. In a multidrop network, the transmitter's measured process variable is output digitally, so the 4-20mA signal (locked at 4mA) is not used.

A HART-based control system uses each transmitter's individual address (0-63 in HART 7) to configure or view the transmitter's data. A HART Communicator host or PC can be used in this configuration to access information from, or transmit configuration information to, the transmitter from anywhere on the HART loop.

Figure 3. *Save time and money by multidropping several Smart HART transmitters onto a single digital data link. Utilizing THZ^3 or TDZ^3 transmitters with dual inputs allows you to cost effectively monitor several temperature points on one HART input channel. HART 7 allows digital multidrop addresses of 1-63.*

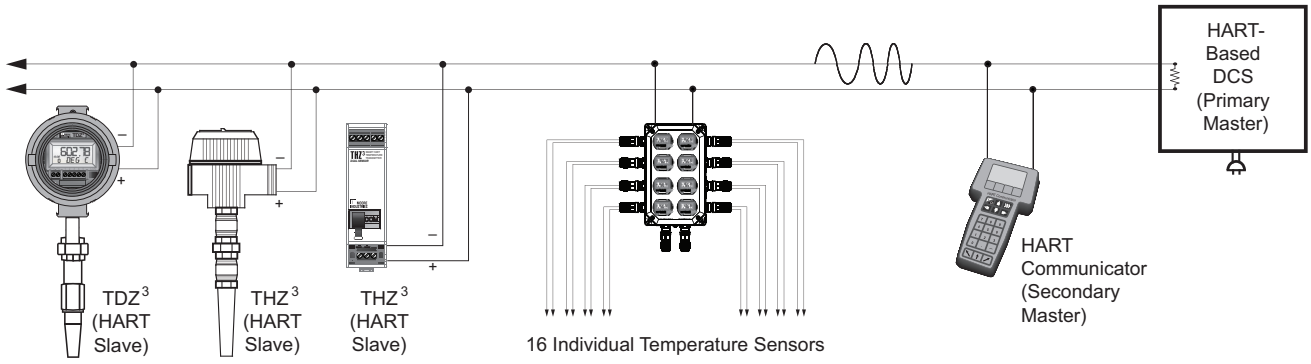

HART Master/Slave Structure

To implement two-way communications between the transmitter and the device configuring or receiving its information, the transmitter operates in a HART Master/Slave structure.

The THZ³ or TDZ³ is a Slave (or Slaves in a multidrop network). There can be two Masters per system: a Primary Master and a Secondary Master. In the majority of applications, the Primary Master is a HART-based host or control system and the Secondary Master is typically a hand-held configurator. Operating in HART's Poll/Response (Normal) Mode, the HART Master polls the transmitter two times per second to access the current process variable status, send setup data to the transmitter, or remotely view its identification, configuration and diagnostic data.

Device Intelligence for Smarter Monitoring and Control

The advanced features we have built into the THZ³ and TDZ³ give you the ability to simulate sensor input before you commit to installation, alert you to faulty sensor conditions and prevent unwanted alarms which help increase your process uptime and availability.

- **Sensor Drift and Corrosion Detection** checks and alerts you when the sensor is drifting out of your preset range or when sensor resistance levels drastically change, which can be an early indication of sensor failure.
- **Smart Range Alarms** offer four HART alarms set to any input or calculated input that detect when the variable is within or outside user preset limits.
- **High Availability Option** enables the user to select how the AO behaves when there is an input failure or out-of-range value detected by the transmitter. This prevents nuisance alarms on startups or batch process shutdowns.
- **Input Simulation Capability** allows the user to manually input a direct or calculated value, in effect simulating a real input to test the AO or any HART diagnostic and range alarms.

Set Up with HART Host, Communicator or FDT-Compliant Host or Program (No HART Modem Required)

The THZ³ and TDZ³ Smart HART Transmitters are HART and DTM programmable. They can be programmed quickly and easily and interrogated at any time from anywhere on the 4-20mA loop (see Figure 4). You can use a standard hand-held HART Communicator, a HART compatible host, or you can program or monitor with any FDT compliant host or program such as PACTware utilizing our DTM.

Figure 4. *From any termination point on the 4-20mA loop, you can view, test and change the transmitter's operating parameters using a HART Communicator or from a PC using our DTM with PACTware or other FDT compliant program (a HART modem is not required for PC setup).*

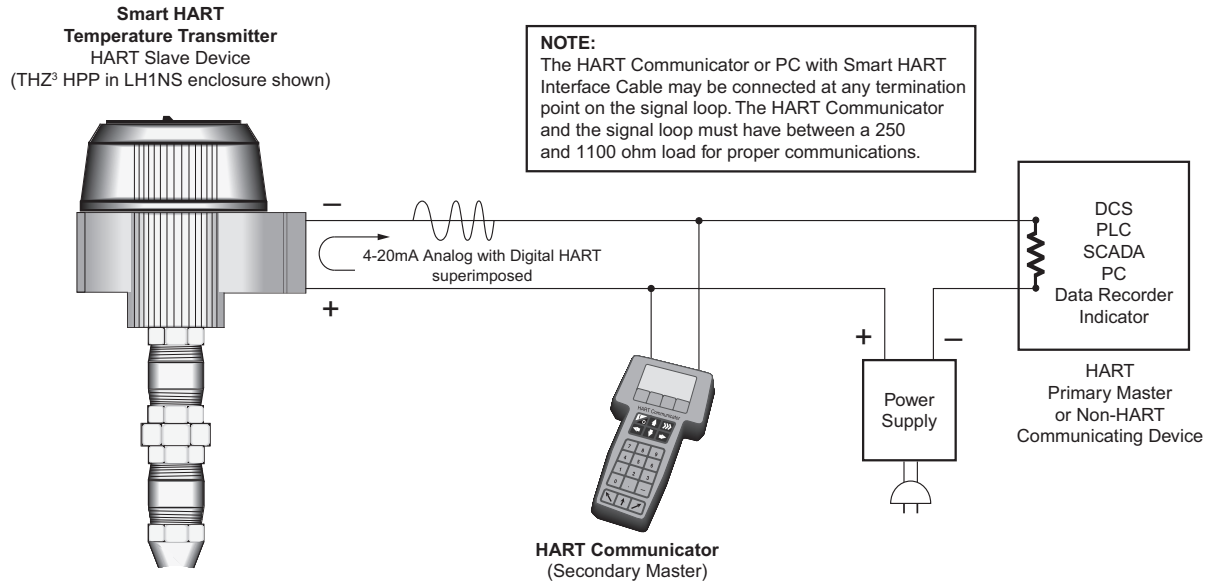

Set Up (Continued)

- **Program Input Type and Range—**Span, zero and input type values are all programmable.
- **Adjust Sensor Trim Offset—**Set an offset to compensate for measurement errors that are caused when a temperature sensor is not performing to its rated curve specifications.
- **Set Damping Time—**Eliminate imprecise readings caused by noise and other insignificant process fluctuations by setting a damping time between 0-60 seconds.
- **View Real-Time Process Values—**View the existing process value (in the appropriate engineering unit), lower and upper range values, actual output current and output current as a percentage of output span.
- **Choose Sensor Failure Mode—**If the input is lost, you have the choice of the output going upscale (to 23.6mA), downscale (to 3.6mA) or holding its last value.
- **Select Device Identification and Data—**Tag number (Long Tags up to 32 characters supported in HART 7), configuration date, unit location code (16 characters), a message (32 characters) and polling address (0-63) are selectable.
- **Fix Output Current (Loop Test)—**To assist in calibrating your system, the transmitter's current output can be fixed to a known value so you can check it against the value being read by your receiving device.

Non-Volatile Memory
If power to the transmitter is lost, the unit resumes normal operation using the parameters that were configured, upon reapplication of power.

Point-to-Point Loops Deliver Analog Simplicity with Remote Programmability

In the majority of applications, the THZ^3 or TDZ^3 is installed on a point-to-point 4-20mA process loop like a regular analog transmitter (see Figure 4). A HART Communicator, HART-based system or PC is used to configure and view the transmitter's operating parameters and diagnostic data from any point on the loop.

Figure 5. *The TDZ^3 features a standard process display that shows input(s), output or toggles intermittently between both.*

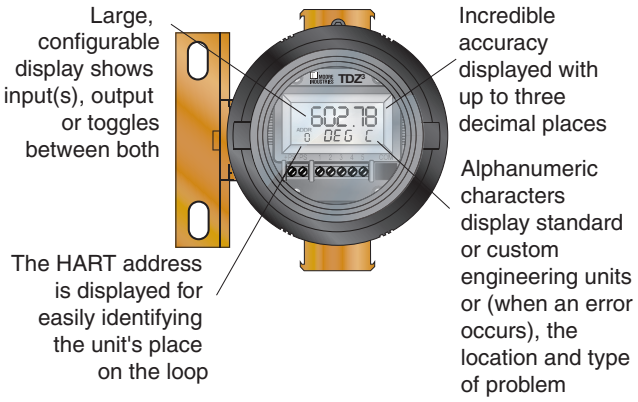

THZ^3 & TDZ^3 Device Description (DD)

Moore Industries' Device Description (DD) is the device-specific programming information that is loaded into a standard HART Communicator. It allows access to all of the unit's programming functions except the custom linearization table function.

How to Determine if Your HART Communicator Has a THZ^3/TDZ^3 Device Description

Hand-held HART Communicators typically feature a list of companies in a DD library. The "THZ^3/TDZ^3" will appear under Moore Industries if you have the proper DD installed. If the handheld does not have the proper DD, contact the nearest regional sales and service office.

Also Programs with the Generic HART DD

Even if your communicator is not up to date, most of the important programming features can be accessed without the THZ^3/TDZ^3 DD by using the "Generic" HART DD available on HART Communicators. Or you can order the unit factory-configured by Moore Industries.

Easy-to-Read, Customizable Display

The TDZ^3 transmitter comes standard with a large display that features easy-to-read alphanumeric characters. Set the display to show input status, output status or toggle between both. It can even be custom-scaled to display an engineering unit of your choice (see Figure 5).

Total Sensor Diagnostics

These transmitters perform continuous sensor diagnostics (Figure 6). This patented Moore Industries feature can save you from costly lost production time and hours of troubleshooting. If the sensor breaks or otherwise stops sending a signal during operation, the transmitter sends the output upscale or downscale to warn of trouble, and provides a HART digital error message that can be read by a HART communicator, computer-based system or PC. If the sensor being utilized is a RTD, the THZ³ or TDZ³ instantly displays the type and location of the error.

Trims to Respond to Specific Sensor Curve Segments

Most transmitters' zero and span values can be calibrated to measure a specific range within a sensor's overall curve capability. However, for even greater measurement accuracy, our transmitter trim capabilities go much further.

The THZ³ and TDZ³ can be trimmed with two data points within the selected zero and span measurement range (Figure 7). This advantage allows a complete process range to be monitored, while placing measurement emphasis on a specific segment of the range most critical to the process. In the figure below, the actual sensor curve is used in place of the ideal RTD curve between 20°C and 27°C. This provides incredible precision over a limited portion of span, while measuring the remainder of the span with the THZ³ or TDZ³'s usual outstanding accuracy.

Program 128-Point Custom Curves

Beyond trimming curves, you can create up to four custom curves and apply them to any available device variables in the THZ³/TDZ³. You can program several properties for each curve including:

- The number of active points in the custom curve
- Units of the inbound data to be processed by the curve (X values)
- Units of the outbound data that is the result of processing by the curve (Y values)

Precise Linearization and RJC

The THZ³ and TDZ³ use an advanced linearization method to minimize the conformance error. Its Reference (Cold) Junction Compensation techniques produce stable readings even in fluctuating ambient temperature conditions. For non-linear inputs, create custom linearization curves using our DTM with any FDT-compliant host.

Figure 6. *Patented Total Sensor Diagnostics saves troubleshooting time.*

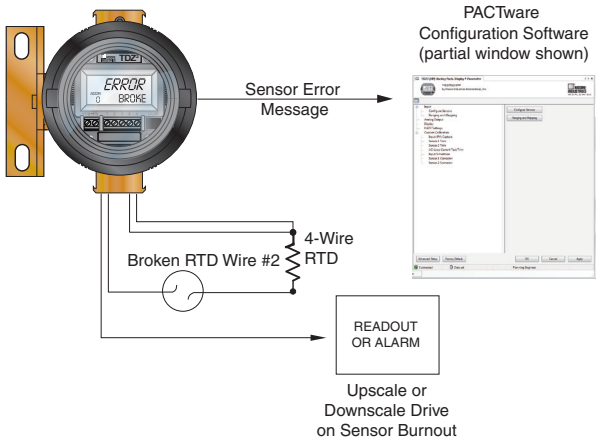

Figure 7. *The THZ³ and TDZ³ can be set to measure the segment most critical to the process.*

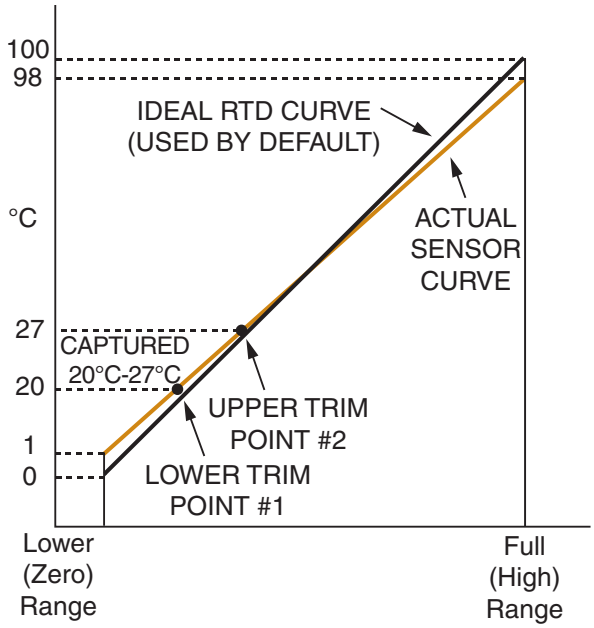

Quick and Intuitive Setup

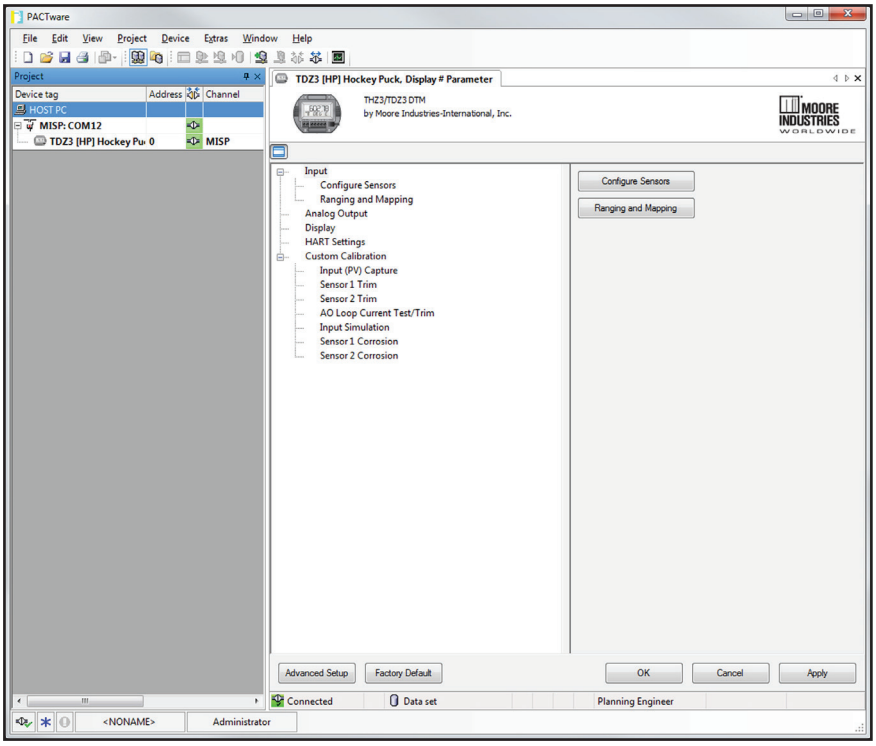

FREE PACTware Configuration Software with Versatile Programming Options

Download PACTware software for FREE from our website, which allows you to set up all transmitter settings utilizing our DTM's easy to use pull down menus.

No HART Modem Required—Using the Moore Industries PC Interface Cable, the transmitter is programmed via a communication port located on the front of the unit. A HART modem is not required to connect the PC to the transmitter.

Remote PC Programming With a HART Modem With PACTware—For programming from any access point on the loop, a HART-to-USB Smart Interface Cable (modem) can be purchased separately (see Ordering Information for details) to access the THZ³ and TDZ³ programming options. The HART modem can also be connected directly to the transmitter.

Once a setup is created, it can be downloaded to multiple transmitters. Just a few of the time saving and performance enhancing features include:

Set Up Safeguards—It is nearly impossible to make incompatible configuration selections.

Quick Transmitter/Configuration Upload/ Download—
PACTware offers one button uploading and downloading of transmitter configuration.

Toolbar for Frequently Used Commands—
A conveniently located toolbar provides quick access to often used configuration functions.

Real-Time Process Readout—The process measurement and the communication status between the transmitter and PACTware can be viewed in a one-page window.

Precise Digital Output Trimming—This essentially eliminates the impact of measurement errors introduced by inaccurate readout devices.

Selectable Under Range, Over Range and Sensor Failure Values—By setting different default values for each condition, you can distinguish between the failure modes when they occur.

Store, E-mail, Download and Print Files—
The configuration record you've created may be downloaded to any number of transmitters, saved, e-mailed, or printed for record keeping.

THZ³ Associated Apparatus

A traditional Intrinsically Safe (IS) system installation requires a barrier or associated apparatus interface between the temperature sensor located in the hazardous area and the monitoring equipment located in the safe area. Its function is to limit the energy to the hazardous area such that, even under a fault condition, there cannot be enough electrical or thermal energy released from the safe area into the hazardous area to ignite an explosive atmosphere.

One method of protection is to use temperature sensor Zener Diode barriers which are simple passive devices comprised of Zener diodes, resistors and fuses that serve to limit the voltage, current, and power available to the hazardous area sensor or device. This design requires the use of a dedicated IS earth ground connection maintained at less than 1Ω, which can sometimes be hard to locate or guarantee.

Another protection method is to install Isolated barriers for your temperature sensors located in hazardous areas. These are active devices that incorporate galvanic isolation, thus eliminating the requirement for a very low impedance and high integrity earth ground. However, these barriers require auxiliary operating power and cost more than passive Zener barriers.

The disadvantage of these separate IS barriers is the installation and maintenance costs. Many of these costs can be drastically reduced if an associated apparatus like the THZ³-DIN with the -AIS option is used.

Since the THZ³-DIN is an associated apparatus, which includes a built-in IS barrier in its front end, there is no need for the additional cost of a barrier, cabinet space, a high integrity clean ground connection, separate power supply or custom vendor backplane. This dramatically reduces the cost of purchase, installation and long-term maintenance.

The THZ³-DIN with the -AIS Option is an associated apparatus which is suitable for installation in Non-Hazardous or Class I Division 2/Zone 2 areas with direct connection to temperature sensors located in Class I Div 1/Zone 0/1 locations.

Associated I.S. Input Wiring

Figure 8. *The THZ³-DIN with -AIS option is an associated apparatus, which includes a built-in IS barrier in its front end, allowing the connected sensors to be located in a hazardous area.*

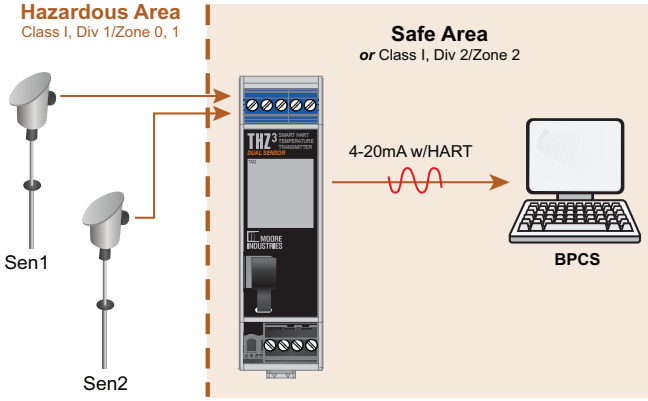

See the white paper: *"Associated Apparatus: The Safe and Most Affordable IS Solution"* for a more detailed overview of Associated IS Apparatus.

Figure 9. *The THZ³-DIN with -AIS option Entity Parameters.*

Entity Parameters PRG (Terminals 1, 2, 3, 4, 5)						
Gas Group	Uo (Voc) V	Io (Ioc) mA	Po mW	Co (Ca) µF	Lo (La) mH	Lo (La)/Ro mH/Ohm
IIC (A,B)	7.94	71.43	141.8	8.32	6.96	250.74
IIB (C)	7.94	71.43	141.8	99.92	27.87	1002.97
IIA (D)	7.94	71.43	141.8	999.92	55.74	2005.95
Temperature Class: T4 Tamb = -40°C to +85°C			All field wiring shall be rated for +90°C			

Specifications

HART Specifications

Address Range: 0-63 (1-63 are for multidrop loops)
Transmission Speed: 1200 bps
Character Format: 1 Start Bit - 8 Data Bits - 1 Odd Parity Bit - 1 Stop Bit

Performance

Input Accuracy: Refer to Table 1
Output Range: 4-20mA
Analog Output Accuracy: 3µA (0.019% of 4-20mA Span)
Overall Accuracy: The overall accuracy of the unit is the combined input and output accuracy. It includes the combined effects of linearity, hysteresis, repeatability and adjustment resolution. It does not include ambient temperature effect. For T/C input only, add the Reference Junction Compensation error
Reference (Cold) Junction Compensation: ±0.25°C (±0.45°F); DIN ±0.45°C (±0.81°F)
Stability: Refer to Table 2
Isolation: THZ³ HPP, DIN and DIN –RF: 500Vrms input-to-output continuous; will withstand a 1350Vac dielectric strength test for one minute with no breakdown TDZ³ HP: 500Vrms input-to-output continuous, will withstand a 500Vac dielectric strength test for one minute with no breakdown
Response (Rise) Time: 100msec maximum for the output to change from 10% to 90% for an input step change of 0% to 100%
Step Response Time: 460msec (single), 650msec (dual) typical from the time an input is applied until the output reaches 90% of its final value

Performance (Continued)

Ripple: 10mVp-p measured across a 250 ohm load resistor at frequencies up to 120Hz
Input Over-voltage Protection: ±3Vdc peak to peak, maximum
Digital Input Filter: User-programmable; 50/60Hz
Power Supply Effect: ±0.002% of span per 1V change
Load Effect: Negligible within specified power limits
Load Capability: (500 ohms@24V)

$$\frac{\text{Supply Voltage - 12V}}{0.024\text{A}} = \text{Ohms}$$

Output Fail Response: Compliant with Namur 43; User-programmable, Upscale 23.6mA; Downscale 3.6mA; preset value or hold-last output
Output Current Limiting: User-programmable, 3.6 to 4.0mA and 20 to 23.6mA for input under/over range; 24mA, maximum (hardware limit)
T/C Input Impedance: 40Mohms, nominal
RTD & Ohms Excitation: 250 microamps, ±10%
RTD Lead Wire Resistance Maximum: RTD resistance + 2X lead wire resistance < 4000 ohms;
Damping: User set; 0-60 seconds
Resolution: Input, 20-bit; Output, 16-bit
Power Supply Requirement: 12-30Vdc for I.S. version; 12-42Vdc for standard version

Display

Type: LCD; Top Row, 10mm (0.4 in) high black digits on a reflective background; Bottom Row, 6mm (0.225 in) high digits on a reflective background; Two-digit HART address indicator
Format: Two rows of five alphanumeric characters
Decimal Points: Allowed decimal places: Auto, 1, 2 or 3
Range: -99999 to 99999
Minimum Display Span: 1.00

Ambient Temperature

Operating Range: -40°C to +85°C (-40°F to +185°F)
Storage Range: -40°C to +85°C (-40°F to +185°F)
Relative Humidity: 0-95%, non-condensing
Ambient Temperature Effect: See Table 3
Effect on Reference (Cold) Junction Compensation: ±0.005% per °C change of ambient temperature
Startup Time: The system output reaches 90% of its value based on input in less than 5 seconds after power up.
Noise Rejection: Common mode, 100dB@50/60Hz; Normal Mode: Refer to Table 4
RFI/EMI Immunity: 20 V/m @ 80-1000 MHz, 1kHz AM for TDZ³ HP and THZ³ DIN -RF and 10 V/m @ 80-1000 MHz, 1kHz AM for THZ³ DIN and THZ³ HPP when tested according to IEC61000-4-3

Weight

THZ³ DIN: 221g (7.9 oz)
THZ³ HPP: 91g (3.2 oz)
THZ³ HPP in LH1: 423g (15.1 oz)
THZ³ HPP in LH2: 644g (22.9 oz)
TDZ³ HP: 182g (6.4 oz)
TDZ³ HP in BH: 1.4kg (50.2 oz)
TDZ³ HP in D-Box: 672g (23.4 oz)
TDZ³ HP in SB: 3.2kg (113 oz)

Table 1. *Input and Accuracy Table (RTD, T/C, Ohm, mV and Potentiometer Input Model)*

Input	Type	α*	Ohms	Conformance Range	Minimum Span	Input Accuracy**	Maximum Range
RTD (2-, 3-, 4-Wire)	**Platinum**	0.003850	100	-200 to 850°C -328 to 1562°F	10°C (18°F)	±0.1°C (±0.18°F)	-240 to 960°C -400 to 1760°F
			200				
			300				
			400				
			500				
			1000				
		0.003902	100	-100 to 650°C -148 to 1202°F			-150 to 720°C -238 to 1328°F
			200				
			400				
			500				
			1000				
		0.003916	100	-200 to 510°C -328 to 950°F			-240 to 580°C -400 to 1076°F
	Nickel	0.00672	120	-80 to 320°C -112 to 608°F			-100 to 360°C -148 to 680°F
	Copper	0.00427	9.035	-50 to 250°C -58 to 482°F		±0.85°C (±1.53°F)	-65 to 280°C -85 to 536°F
Ohms	**Direct Resistance**	n/a	0-4000 ohms	0-4000 ohms	10 ohms	±0.4 ohms	0-4095 ohms
	Potentiometer		4000 ohms	0-100%	10%	±0.1%	0-100%
T/C	**J**	n/a	n/a	-180 to 760°C -292 to 1400°F	35°C 63°F	±0.25°C (±0.45°F)	-210 to 760°C -346 to 1400°F
	K	n/a	n/a	-150 to 1370°C -238 to 2498°F	40°C 72°F	±0.3°C (±0.54°F)	-270 to 1372°C -454 to 2501°F
	E	n/a	n/a	-170 to 1000°C -274 to 1832°F	35°C 63°F	±0.2°C (±0.36°F)	-270 to 1000°C -454 to 1832°F
	T	n/a	n/a	-170 to 400°C -274 to 752°F	35°C 63°F	±0.25°C (±0.45°F)	-270 to 400°C -454 to 752°F
	R	n/a	n/a	0 to 1760°C 32 to 3200°F	50°C 90°F	±0.55°C (±0.99°F)	-50 to 1768°C -58 to 3214°F
	S	n/a	n/a	0 to 1760°C 32 to 3200°F	50°C 90°F	±0.55°C (±0.99°F)	-50 to 1768°C -58 to 3214°F
	B	n/a	n/a	400 to 1820°C 752 to 3308°F	75°C 135°F	±0.75°C (±1.35°F)	0 to 1820°C 32 to 3308°F
	N	n/a	n/a	-130 to 1300°C -202 to 2372°F	45°C 81°F	±0.4°C (±0.72°F)	-270 to 1300°C -454 to 2372°F
	C	n/a	n/a	0 to 2300°C 32 to 4172°F	100°C 180°F	±0.8°C (±1.44°F)	0 to 2315°C 32 to 4200°F
mV	**DC**	n/a	n/a	-50 to 1000mV	4mV	30 microvolts	-50 to 1000mV

Sensor-to-Transmitter Trimming
System Accuracy up to ±0.05% of reading*.

*High-accuracy measurements are achieved using a 4-wire, 1000-ohm, Platinum RTD within a span of 0 – 93°C (32 - 200°F). We use sensor trimming to match the sensor/transmitter reading to that of the NIST traceable PRT.

**Ambient Temperature Reference Conditions for Specifications: 25°C

Table 2. *Long-Term Stability Table (RTD, T/C, Ohm, mV and Potentiometer Input Model)*

Stability (% of maximum span)	Input to Output			Input to HART		
	1 yr	3 yrs	5 yrs	1 yr	3 yrs	5 yrs
T/C, mV	0.08	0.14	0.18	0.008	0.015	0.019
RTD, Ohm, Potentiometer	0.09	0.16	0.21	0.047	0.081	0.104

Table 3. *Ambient Temperature Effects Table (RTD, T/C, Ohm, mV and Potentiometer Input Model)*

Sensor Type	Digital Accuracy per 1°C (1.8°F) change in Ambient	Analog Accuracy per 1°C (1.8°F) change in Ambient)
RTD	0.003°C	0.001% of span (16mA)
All T/C	0.0003°C + 0.0015% of reading	0.001% of span (16mA)
T/C B	0.003°C + 0.0015% of reading	0.001% of span (16mA)
Millivolt	0.0005mV + 0.0015% of reading	0.001% of span (16mA)
Ohm	0.002 ohms + 0.0015% of reading	0.001% of span (16mA)

*Ambient Temperature Reference Conditions for Specifications: 25°C

Table 4. *Normal Mode Rejection Ratio Table (RTD, T/C, Ohm, mV and Potentiometer Input Models)*

Sensor Type	Max. p-p Voltage Injection for 70dB at 50/60Hz
T/C E	120mV
T/C J, K, N, C	60mV
T/C T, R, S, B	30mV
100 ohm Pt RTD	120mV
200 ohm Pt RTD	200mV
300, 400, 500, 1000 ohm Pt RTD	400mV
1000 ohm Pt RTD	800mV
120 ohm Ni RTD	200mV
9.03 ohm Cu RTD	30mV
Resistance 4Kohm/mV 1000mV	800mV
Resistance 2Kohm/mV 500mV	400mV
Resistance 1Kohm/mV 250mV	200mV
Resistance 500ohm/mV 125mV	120mV
Resistance 250ohm/mV 62.5mV	50mV
Resistance 125ohm/mV 31.25mV	30mV

Complete Temperature Assemblies

Free yourself from the hassle of looking around for pieces and parts by ordering a complete assembly.

To complement our high-quality transmitters, we carry complete lines of RTDs, thermocouples, thermowells, connection heads and fittings. Get the quality you need and the options you require with the ease of just one ordering number!

For the best accuracy, have your transmitter and sensor calibrated together in our sensor-matching calibration bath.

See our Ready-to-Install Temperature Transmitter Assemblies data sheets for details.

The THZ3-DIN with the -AIS Option is an associated apparatus which is suitable for Non-Hazardous or Class I, Division 2/Zone 2 locations with sensor terminals connected to equipment in Class I, II, III, Division 1/Zone 0 locations.

Sensor-to-Transmitter Matching

Our sensor matching process starts by immersing the temperature sensor into stabilized temperature baths in our calibration lab. The transmitter captures two points from the sensor and stores them in non-volatile memory. It then uses them to compensate for deviations between a sensor's stated linearization curve and its actual measurements.

Sensor matching provides you with incredible accuracy at an affordable price. Accuracy varies with the sensor, so contact the factory for information on your sensor type.

Versatile Housing, Enclosure and Mounting Choices

Model	Features	Dimensions
THZ³ in **HPP** Encapsulated Housing	• Small size and protected, encapsulated electronics make this model ideal for integrating into industrial machinery, machine tools, facility monitoring systems and similar production and process equipment. • For retrofit applications, standard diameter and mounting hole dimensions allow easy integration into installed thermowell and remote-mounted connection heads.	Page 14
THZ³ in **LH** Aluminum Connection Head Field-Mount Enclosure	• Compact, lightweight connection head mounts right on the thermowell/sensor assembly, or in a convenient remote location from the sensor. • Encapsulated electronics resist the harmful effects of moisture and humidity that enter though the conduit connections. • Explosion-proof and very affordable general location (NEMA 4X, IP66) versions available.	Page 14
TDZ³ in **BH** Aluminum Field-Mount Enclosure **TDZ³ in SB** 316 Stainless Steel Field-Mount Enclosure **TDZ³** in **D-BOX** Aluminum Base with Polycarbonate Cover Field-Mount Enclosure	• Perfect choice when reliable field protection and on site indication are required. • Modular transmitter electronics can be easily removed without disturbing the enclosure or sensor assembly. • Explosion-proof (BH and SB enclosures) or economical general location NEMA 4X, IP66 (D-BOX) protection.	Page 15
THZ³ in **DIN** Rail Mount Housing	• The -AIS Option allows direct connection of sensors from hazardous areas. • Only 28mm (1.1-inch) wide, this compact model is perfect for mounting in a control room, high-density instrument cabinet or field-mounted enclosure. • Universal mounting bracket easily snaps on and off of 35mm Top Hat DIN-rails and standard relay tracks.	Page 16
TDZ³ in **HP** Hockey-Puck Housing with Display	• Mounts on a surface, G-type or top hat rails and on relay track when on site display is needed in a control room, cabinet or enclosure. • Replacement transmitter installs in a Moore Industries BH, SB or D-BOX enclosure and in other common field-mount instrument enclosures.	Page 16

Ordering Information

Field Mount Unit - No Display

Unit	Input	Output	Power	Options	Housing
THZ³ Smart HART Temperature Transmitter	**PRG** Programmable with standard HART communicator or HART compatible host; program or monitor with any FDT compliant host or program, such as PACTware, utilizing our DTM. RTD 2-, 3-, 4-Wire Platinum, Copper, Nickel Thermocouple (J, K, E, T, R, S, B, N, C) 0-4000 ohms -50-1000mV (see Table 1 for additional information)	**4-20MA** Scalable to narrower ranges	**12-42DC*** **12-30DC** Intrinsically-Safe (I.S.) applications * Non-incendive (Class 1 Div 2, Zone 2) by default	**None**	**HPP** Hockey-puck housing for mounting in standard connection heads **LH1NS‡** Aluminum IP66 connection head with two entry ports: ½-inch NPT cable and process–black PBT polyester cover **LH1MS‡** Aluminum IP66 connection head with two entry ports: M20 cable and ½-inch NPT process–black PBT polyester cover **LH1CS‡** Aluminum IP66 connection head with two entry ports: M20 cable and G½ (BSP) process–black PBT polyester cover **LH2NS**(*) or (‡) Aluminum Explosion-proof/Flameproof connection head with two entry ports: ½-inch NPT cable and process–black metal cover **LH2MS**(*) or (‡) Aluminum Explosion-proof/Flameproof connection head with two entry ports: M20 cable and ½-inch NPT process–black metal cover * Either **A** or **E** suffix (comes supplied with 2" pipe mount hardware) **A** suffix indicates ANZEx/TestSafe (Ex d) Flameproof approvals (i.e. LH2NS**A**) **E** suffix indicates ATEX (Ex d and tD) Flameproof approvals (i.e. LH2NS**E**) **‡ P** suffix indicates enclosure comes equipped with base plate and U-bolts for mounting on a 2-inch pipe (i.e. LH1NS**P**) See LH Datasheet for additional information.

To order, specify: Unit / Input / Output / Power / Option [Housing]
Model Number Example: THZ³ / PRG / 4-20MA / 12-30DC / [LH2NS]

DIN-Style Mount Unit

Unit	Input	Output	Power	Options	Housing
THZ³ Smart HART Temperature Transmitter in DIN-style housing	**PRG** Programmable with standard HART communicator or HART compatible host; program or monitor with any FDT compliant host or program, such as PACTware, utilizing our DTM. RTD 2-, 3-, 4-Wire Platinum, Copper, Nickel Thermocouple (J, K, E, T, R, S, B, N, C) 0-4000 ohms -50-1000mV (see Table 1 for additional information)	**4-20MA** Scalable to narrower ranges	**12-42DC**	**-AIS** Includes IS barrier protection allowing direct connection of sensors located in Class I Div 1 & Zone 0/1 hazardous locations - includes blue input terminals **-RF** Enhanced RFI/EMI filtering provides protection of 20 V/m @ 80-1000 MHz, 1kHz AM.	**DIN** DIN-style aluminum housing mounts on 35mm Top Hat (EN50022) rails

To order, specify: Unit / Input / Output / Power / Option [Housing]
Model Number Example: THZ³ / PRG / 4-20MA / 12-42DC / -AIS [DIN]

Ordering Information

Field Mount Unit with Display

Unit	Input	Output	Power	Options	Housing
TDZ³ Smart HART Temperature Transmitter with Display	**PRG** Programmable with standard HART communicator or HART compatible host; program or monitor with any FDT compliant host or program, such as PACTware, utilizing our DTM. RTD 2-, 3-, 4-Wire Platinum, Copper, Nickel Thermocouple (J, K, E, T, R, S, B, N, C) 0-4000 ohms -50-1000mV (see Table 1 in Section 7 for additional information)	**4-20MA** Scalable to narrower ranges	**12-42DC*** **12-30DC** Intrinsically-Safe (I.S.) applications. * Non-incendive (Class 1 Div 2, Zone 2) by default	**None**	**HP** Hockey puck housing and spring clips **DN** Snap-in mounting for HP case on 32mm G or 35mm Top-Hat DIN-rail **FL** Mounting flanges on HP for relay track or screw mounting **BH2NG** (*) or (‡) Aluminum Explosion-Proof enclosure with two 1/2-inch NPT entry ports and a glass cover **BH2TG** (*) or (‡) Aluminum Explosion-Proof enclosure with two 3/4-inch NPT entry ports and a glass cover **BH2MG** (*) or (‡) Aluminum Explosion-Proof enclosure with two M20 x 1.5 NPT entry ports and a glass cover **BH3NG** (*) or (‡) Aluminum Explosion-Proof enclosure with three 1/2-inch NPT entry ports **BH3TG** (*) or (‡) Aluminum Explosion-Proof enclosure with two 3/4-inch side-entry NPT ports, one 1/2" bottom port, and a glass cover **BH3MG** (*) or (‡) Aluminum Explosion-Proof enclosure with two, M20 x 1.5 side-entry ports, one 1/2" bottom-entry port, and a glass cover **SB2NG** (*) or (‡) 316 Stainless Steel 2-Hub, Explosion-Proof enclosure with two, 1/2-inch NPT entry ports and a glass cover **SB2MG** (*) or (‡) 316 Stainless Steel 2-Hub, Explosion-Proof enclosure with two, M20 x 1.5 entry ports and a glass cover **D2LC** 2-Hub, Aluminum base, clear cover, IP66/NEMA 4X enclosure * Either **A** or **E** suffix (comes supplied with 2" pipe mount hardware) **A** suffix indicates ANZEx/TestSafe (Ex d) Flameproof approvals (i.e. BH2MG**A**) **E** suffix indicates ATEX (Ex d and tD) Flameproof approvals (i.e. BH2MG**E**) ‡ **P** suffix indicates enclosure comes equipped with base plate and U-bolts for mounting on a 2-inch pipe (i.e. BH2NG**P**) See BH, SB and D-BOX Datasheets for additional information.

Additional Parts

The communications cables must be purchased separately:

P/N 804-030-26–Non-Isolated Fuse Protected USB Communication Cable (required by IECEx and ATEX for products installed in Intrinsically Safe areas)

P/N 803-040-26–Non-Isolated Serial Configuration Cable for 2-Wire Instruments

P/N 804-021-26–HART-to-USB Smart Interface Cable with HART Modem.

To order, specify: Unit / Input / Output / Power / [Housing]
Model Number Example: TDZ³ / PRG / 4-20MA / 12-42DC / [BH2NGP]

Figure 10. *Dimensions for the THZ³ in the HPP hockey-puck housing.*

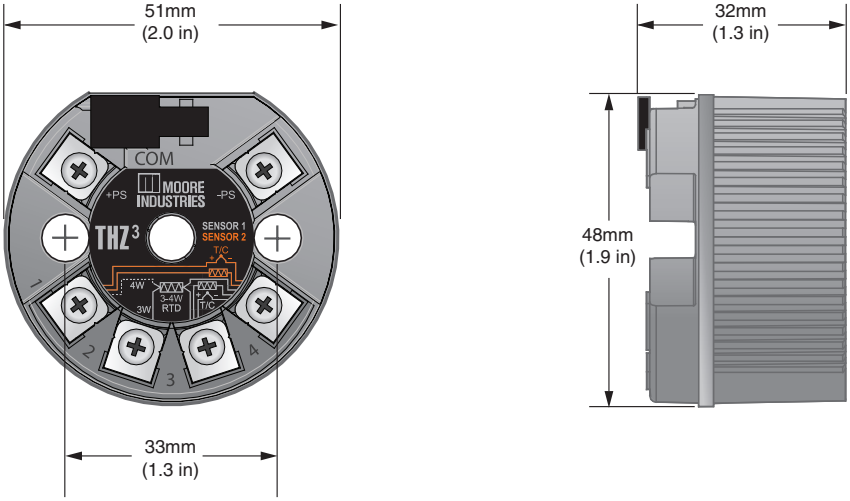

Figure 11. *Dimensions for the THZ³ in the LH connection head.*

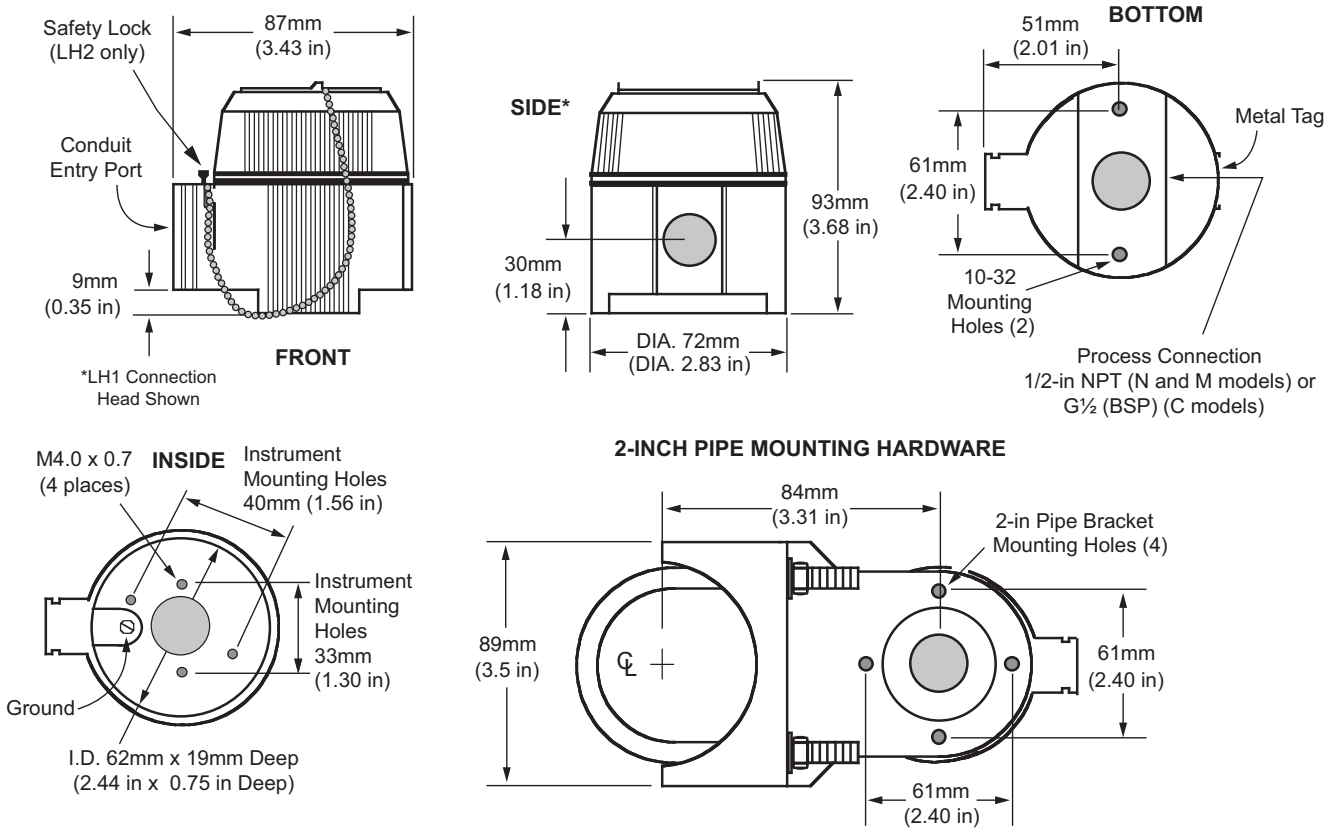

Note: Make sure to calibrate and bench check the instruments prior to installation. Also, install all instruments in their intended application and on their rail before making any electrical connections. Allow enough room for pivoting instruments vertically on the rail for removal in applications involving multiple banks of THZ³ or TDZ³ transmitters.

Figure 12. *Dimensions for the TDZ³ in BH2 field-mount enclosure. BH3 not shown.*

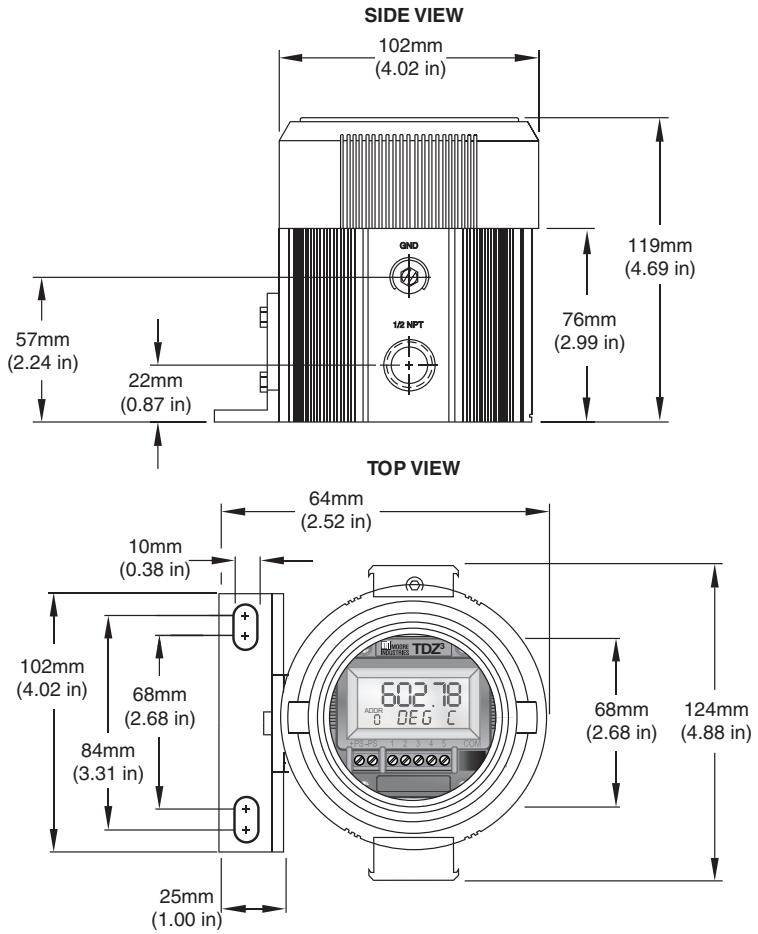

Figure 13. *Dimensions for TDZ³ in D-BOX field-mount enclosure.*

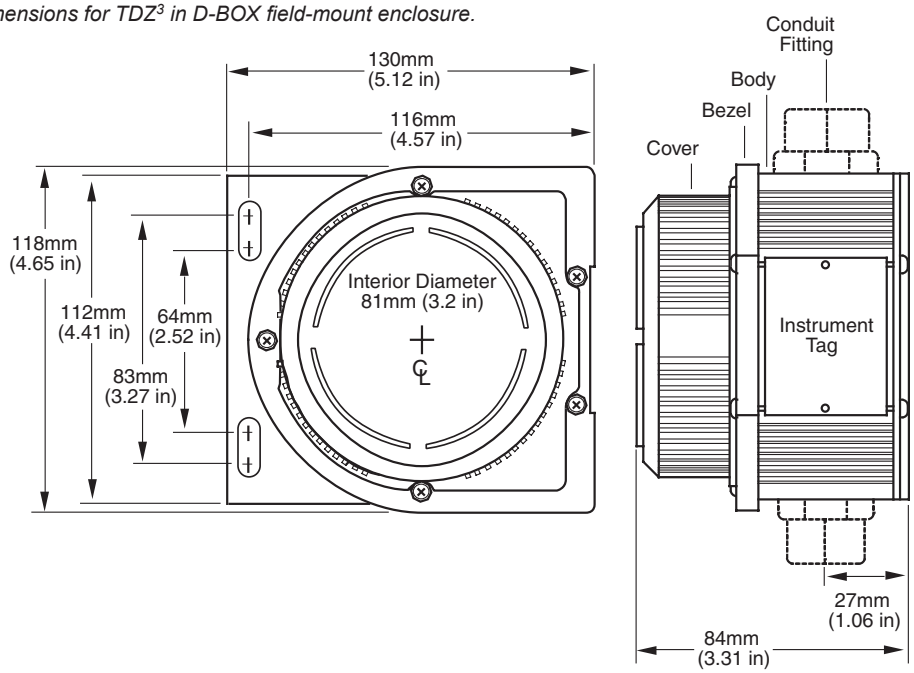

Figure 14. *Dimensions for the THZ³ in an aluminum DIN housing.*

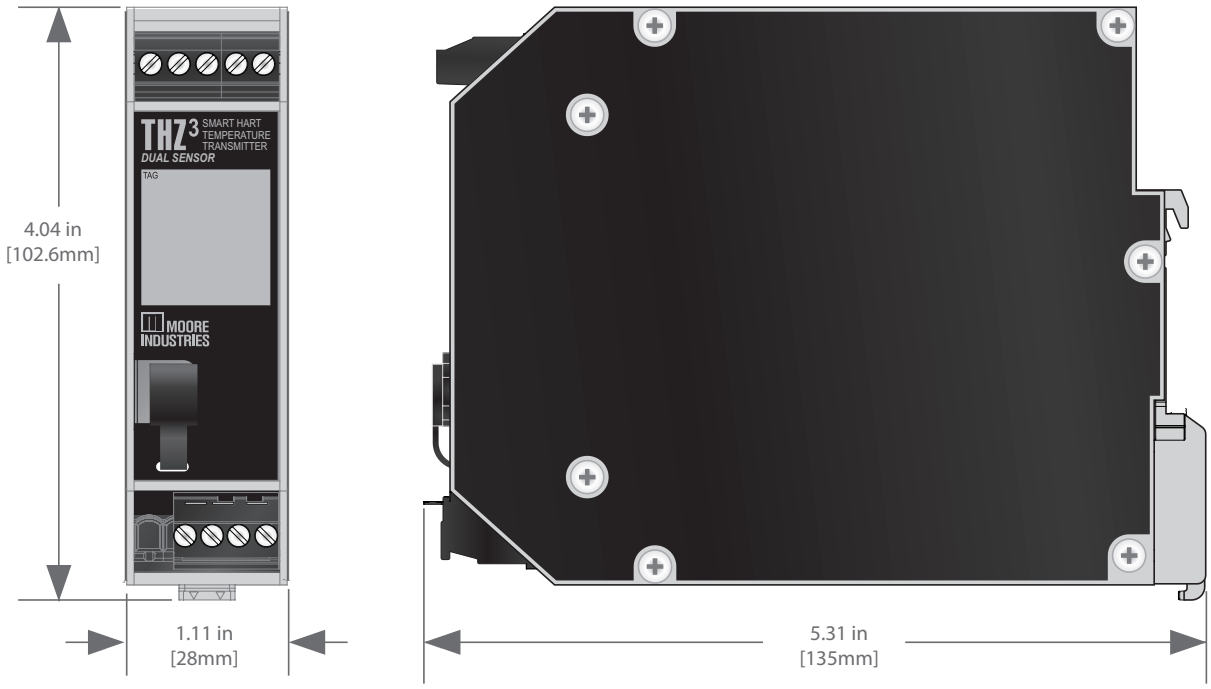

Figure 15. *Dimensions for the TDZ³ in an aluminum HP display housing.*

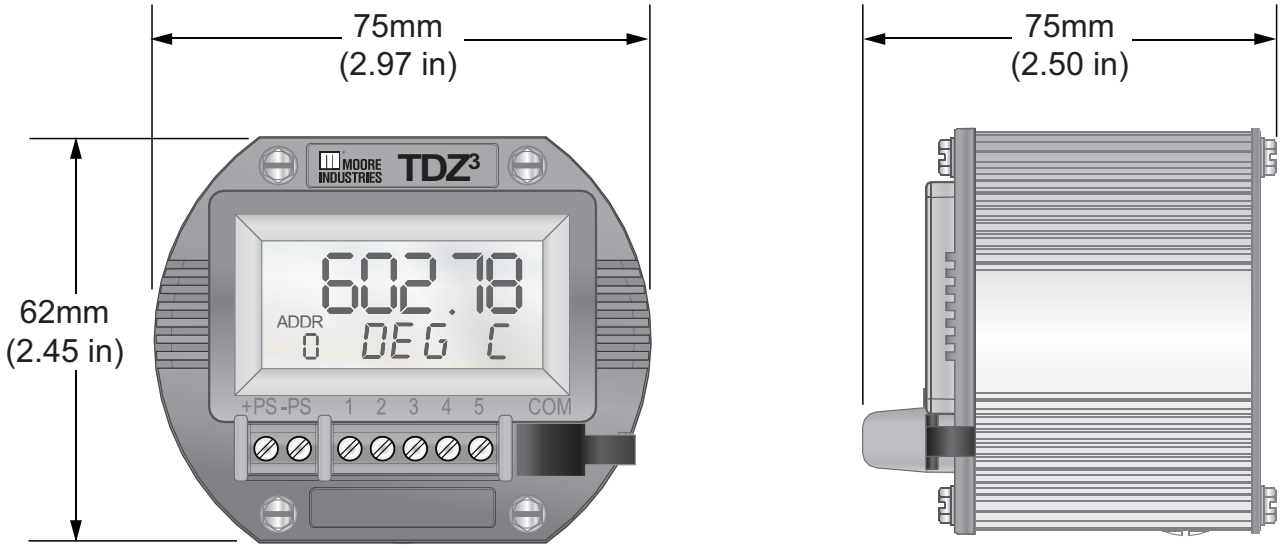

Figure 16. *Terminal designations for all units (While terminal placement may differ from unit to unit, all models use identical numeric designations.)*

THZ3 HPP (4 Terminals) Input Connections

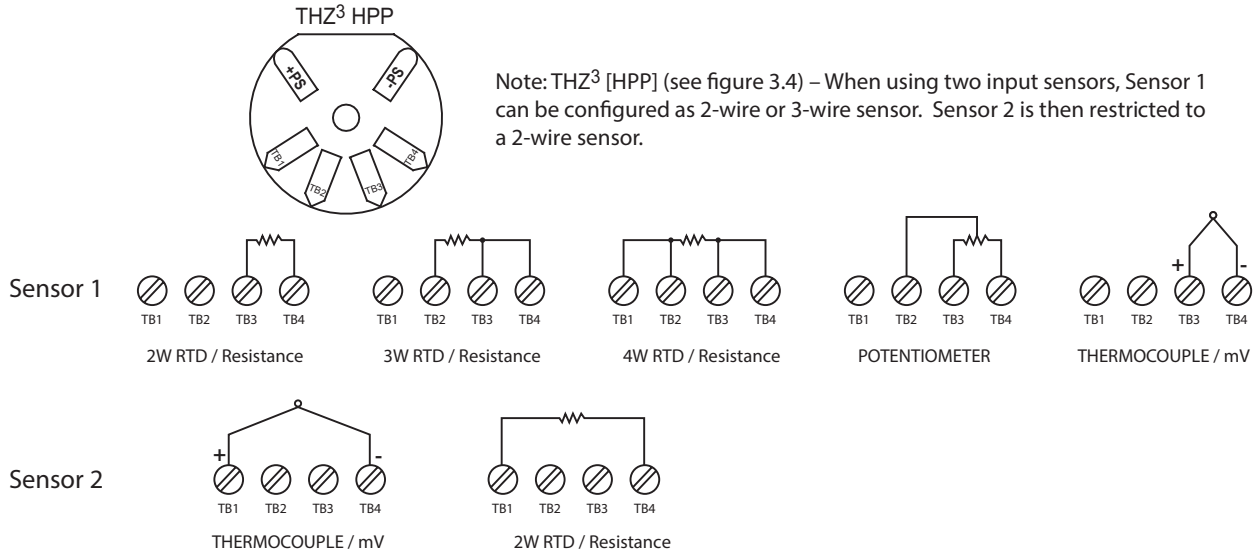

Note: THZ3 [HPP] (see figure 3.4) – When using two input sensors, Sensor 1 can be configured as 2-wire or 3-wire sensor. Sensor 2 is then restricted to a 2-wire sensor.

TDZ3 HP and THZ3 DIN (5 Terminals) Input Connections

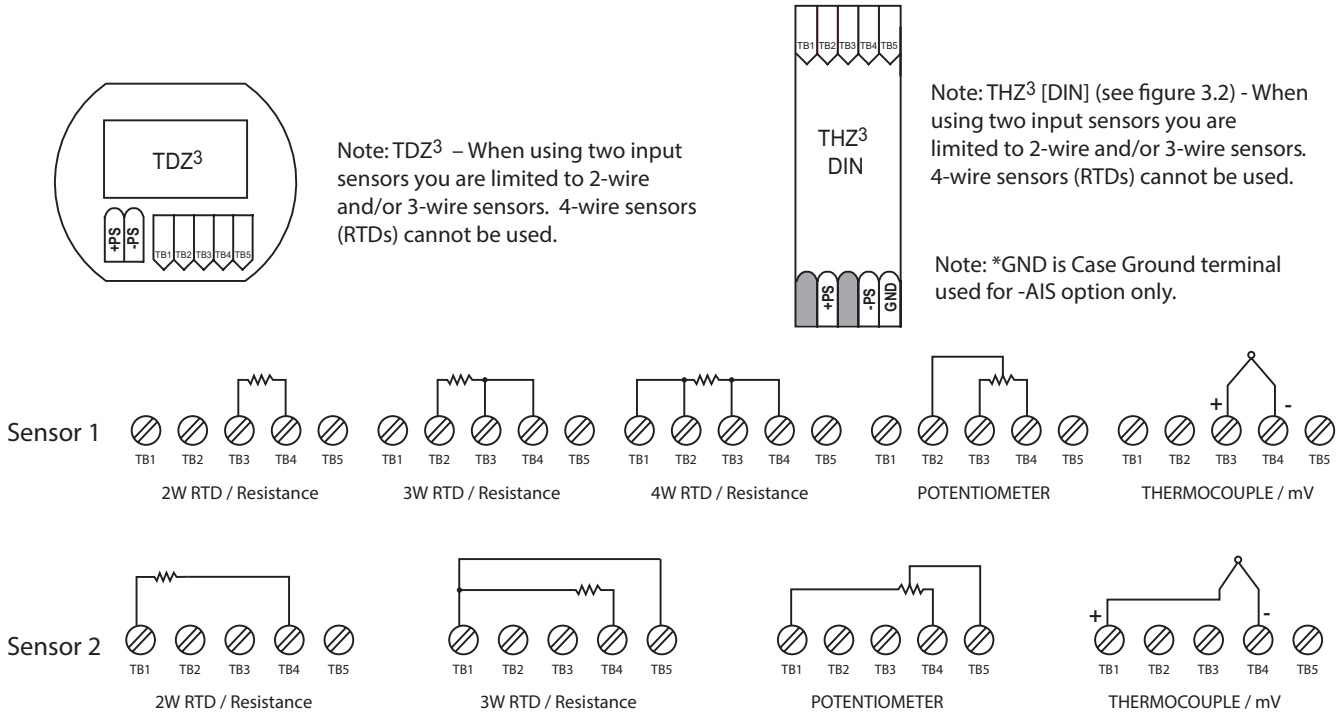

Note: TDZ3 – When using two input sensors you are limited to 2-wire and/or 3-wire sensors. 4-wire sensors (RTDs) cannot be used.

Note: THZ3 [DIN] (see figure 3.2) - When using two input sensors you are limited to 2-wire and/or 3-wire sensors. 4-wire sensors (RTDs) cannot be used.

Note: *GND is Case Ground terminal used for -AIS option only.

Note: When using 2 input sensors, sensor 1 is limited to 2-wire and/or 3-wire sensors. 4-wire sensors cannot be used.

THZ³ & TDZ³

Dual Input Smart HART®
Temperature Transmitter

Certifications

THZ³-HPP

Factory Mutual (US/Canada):
Intrinsically-Safe
Class I, Division 1, Groups A, B, C & D
Class I, Zone 0, AEx ia IIC
Non-Incendive
Class I, Division 2, Groups A, B, C & D
Class I, Zone 2, AEx nA IIC

ATEX Directive 2014/34/EU (FM Approvals):
Intrinsically-Safe and Type "n"
II 1G Ex ia IIC Ga
II 3G Ex nA IIC Gc

IECEx Scheme (FM Approvals):
Intrinsically-Safe and Type "n"
Ex ia IIC Ga
Ex nA IIC Gc

Temperature Codes:
T4 @ 85°C Maximum Operating Ambient
T5 @ 85°C Maximum Operating Ambient
T6 @ 60°C Maximum Operating Ambient

TDZ³-HP

Factory Mutual (US/Canada):
Intrinsically-Safe
Class I, Division 1, Groups A, B, C & D
Class I, Zone 0, AEx ia IIC
Non-Incendive
Class I, Division 2, Groups A, B, C & D
Class I, Zone 2, AEx nA IIC

ATEX Directive 2014/34/EU (FM Approvals):
Intrinsically-Safe and Type "n"
II 1G Ex ia IIC Ga
II 3G Ex nA IIC Gc

IECEx Scheme (FM Approvals):
Intrinsically-Safe and Type "n"
Ex ia IIC Ga
Ex nA IIC Gc

Temperature Code:
T4 @ 85°C Maximum Operating Ambient

THZ³-HPP in LH2 Housing

FM Global Group (FM Approvals):
Explosion-Proof & Dust-Ignition Proof
Class I, Division 1, Groups A, B, C & D
Class II & III, Division 1, Groups E, F & G
Environmental Protection: Type 4X & IP66
Ambient Temperature Range: -20°C to +60°C

CSA Group (Canadian Standards Association):
Explosion-Proof
Class I, Division 1, Groups A*, B, C & D
Class II, Groups E, F & G
Class III, IP66
Ambient Temperature Range: -20°C to +60°C; T6
**For Group A applications, seal all conduits within 18"*

ATEX Directive 2014/34/EU (ISSeP):
Explosion/Flameproof
II 2 G D
Ex d IIC T6 Gb
Ex tb IIIC Db T85°C IP66

ANZEx (TestSafe):
Explosion/Flameproof
Ex d IIC T6 (Tamb 60°C) IP66

TDZ³-HP in BH or SB2 Housing

Factory Mutual Approvals (FM Global Group):
Explosion-Proof & Dust-Ignition Proof
Class I, Division 1, Groups A*, B, C & D
Class II & III, Division 1, Groups E, F & G
Environmental Protection: Type 4X & IP66
T6 @ 60°C Maximum Operating Ambient
**For Group A applications, seal all conduits within 18"*

CSA Group (Canadian Standards Association):
Explosion-Proof
Class I, Division 1, Groups A*, B, C & D
Class II, III, Groups E, F & G
Type 4X, IP66
Ambient Temp. Range: -20°C to +85°C; T4
**For U.S. Group A applications, seal all conduits within 18"*

ATEX Directive 2014/34/EU (ISSeP):
Explosion/Flameproof
II 2 G D
Ex d IIC T6 Gb
Ex tb IIIC Db T85°C IP66

ANZEx (TestSafe):
Explosion/Flameproof
Ex d IIC T6 (Tamb 60°C) IP66

THZ³-HPP, TDZ³-HP and THZ³-DIN

CE Conformant – EMC Directive 2014/30/EU – EN 61326; ROHS2 Directive 2011/65/EU

Certifications

THZ³-DIN
Factory Mutual (US/Canada):
Non-Incendive
Class I, Division 2, Groups A, B, C & D

Temperature Code:
T4 @ 85°C Maximum Operating Ambient

THZ³-DIN (-AIS Option only)

Factory Mutual – FM Approvals – US/Canada
Associated Apparatus providing Intrinsically Safe connections to:
Class I, II, III, Division 1, Groups A-G
Class I, Zone 0, [AEx ia] IIC

Non-Incendive
Class I, Division 2, Groups A-D providing I.S. connections to Class I, II, & III, Division 1, Groups A-G

Non-Sparking
Class I, Zone 2, AEx nA [ia Ga] IIC, T4 Gc providing I.S. connections to Class1, Zone 0, IIC

ATEX Directive 2014/34/EU (FM Approvals):
Associated Intrinsically-Safe
Non-Sparking with Intrinsically Safe Outputs
II (1) G [Ex ia Ga] IIC
II 3 (1) G Ex nA [ia Ga] IIC Gc

IECEx **IECEx Scheme (FM Approvals):**
Associated Intrinsically-Safe
Non-Sparking with Intrinsically Safe Outputs
[Ex ia Ga] IIC
Ex nA [ia Ga] IIC Gc

Temperature Code:
T4 @ 85°C Maximum Operating Ambient

Another Great Temperature Transmitter From Moore Industries

SPT Site-Programmable Temperature Transmitter (4-Wire) In DIN-rail Housing with Display

Check out other Moore Industries' products like the SPT Site-Programmable Transmitter - an advanced temperature transmitter/signal conditioner that provides exceptional flexibility, accuracy, and ease-of-use in a compact, universally mountable DIN-style housing. It's easy to scale, and the output type can be set by just flipping a switch for 4-20mA or 1-5V.

Field-selectable input and output, Smart-Ranging, power auto-sensing, and DIN-style packaging makes the SPT an ideal *plant standard* and *universal spare* for all your temperature sensing applications. The SPT accepts T/C, RTD, millivolt, or ohms input in a host of ranges, sensor types, and connection schemes, while providing an isolated, process-ready output.

Forget Complex, Expensive, and Time-consuming Configurators and Calibrators, the SPT setup and calibration is as simple as pushing a few buttons. Its backlit LCD screen leads the user through a simple menu system with easily understandable programming options.

THZ³ & TDZ³

Dual Input Smart HART®
Temperature Transmitter

Digital Temperature Solutions From Moore Industries

TMZ PC-Programmable MODBUS Single and Dual input Temperature Transmitter

The TMZ and TMZ Dual PC-Programmable MODBUS Temperature Transmitter and Signal Converter accepts signal input from a wide array of devices including RTD, thermocouple, current, voltage, millivolt, ohms, resistance and potentiometer. The TMZ Dual allows users to increase density and reduce costs by doubling your temperature monitoring capability in a single unit with dual inputs. The data from both sensors is available on the MODBUS output, allowing the host to use the data for averaging, differential or sensor backup.

Up to 32 TMZs or TMZ Duals can be multi-dropped onto a single low-cost communication link (such as a twisted wire pair) without repeaters, eliminating the need to run a dedicated wire for each signal.

TCS Temperature Concentrator System Multi-Channel Transmitter

The TCS Temperature Concentrator System substantially reduces the cost of transmitting multiple temperature sensor measurements in general purpose and hazardous area locations by concentrating up to 32 signals onto one network. The TCS quickly configures to accept any combination of RTD, T/C, mV and resistance/potentiometer signal inputs. It converts the inputs to the HART® digital communications protocol, and transmits the data long distances from the field to the control room, on an economical HART or MODBUS digital data link. All process, status and diagnostic information can then be accessed by a HART-based DCS or a MODBUS RTU-based control system.

NCS Net Concentrator System Process Control and Distributed I/O

Designed specifically for demanding industrial applications, the NET Concentrator System® (NCS) provides a real-time signal gateway between the field or factory floor and your control strategy. The NCS is the ideal solution when you need to network new and existing legacy process sensors, instruments and final control elements with computer-based monitoring and control systems.

The NCS can handle a wide range of signal input and control output possibilities including current, voltage, discrete, relay, RTD, thermocouple, resistance and potentiometer. The NCS comes standard with one Ethernet (MODBUS/TCP) port and dual, independent MODBUS RTU (RS-485) ports, each configurable as slave or master ports.

MOORE INDUSTRIES

Demand Moore Reliability
www.miinet.com

United States • info@miinet.com
Tel: (818) 894-7111 • FAX: (818) 891-2816
Australia • sales@mooreind.com.au
Tel: (02)8536-7200 • FAX: (02) 9525-7296

BeNeLux • info@mooreind.eu
Tel: 03/448.10.18 • FAX: 03/440.17.97

China • sales@mooreind.sh.cn
Tel: 86-21-62491499 • FAX: 86-21-62490635
United Kingdom • sales@mooreind.com
Tel: 01293 514488 • FAX: 01293 387752

Specifications and information subject to change without notice.